Comfort system

⇒ Outside Mirror, heated and adjustable
⇒ Door opener lighting
⇒ Alarm system
⇒ Entry lights
⇒ Power Window
⇒ Front Interior Lights
⇒ Luggage Compartment Light
⇒ Door warning lights
⇒ Central Locking System

From 2003 m. y.

Main fuse

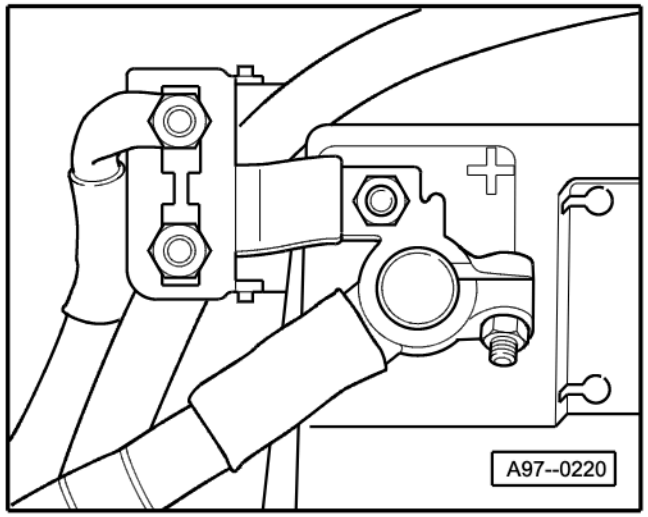

♦ on the Battery

Protected by copyright. Copying for private or commercial purposes, in part or in whole, is not permitted unless authorised by AUDI AG. AUDI AG does not guarantee or accept any liability with respect to the correctness of information in this document. Copyright by AUDI AG.

Fuse holder

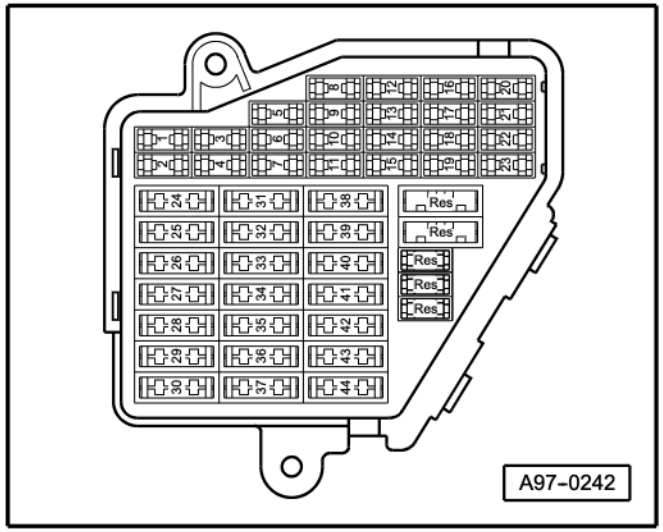

Protected by copyright. Copying for private or commercial purposes, in part or in whole, is not permitted unless authorised by AUDI AG. AUDI AG does not guarantee or accept any liability with respect to the correctness of information in this document. Copyright by AUDI AG.

- Instrument panel driver side

Fuse Colors
30 A - Green
25 A - Withe
20 A - Yellow
15 A - Blue
10 A - Red
7,5 A - Brown
5 A - Beige

Note:

- *Fuse in fusebox from 23 onwards are numbered 223 onwards in Current Flow Diagram.*

Coupling station with threaded connection

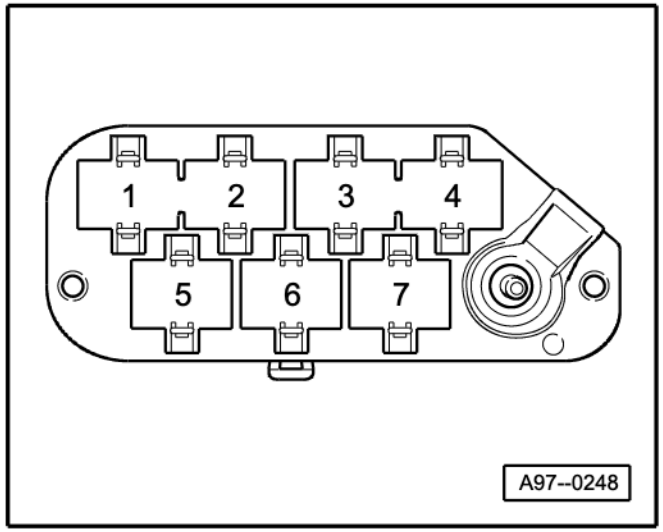

♦ in the electronics box, plenum chamber

3 - 17-Pin Connector, red (T17d)

Connector station A-pillar

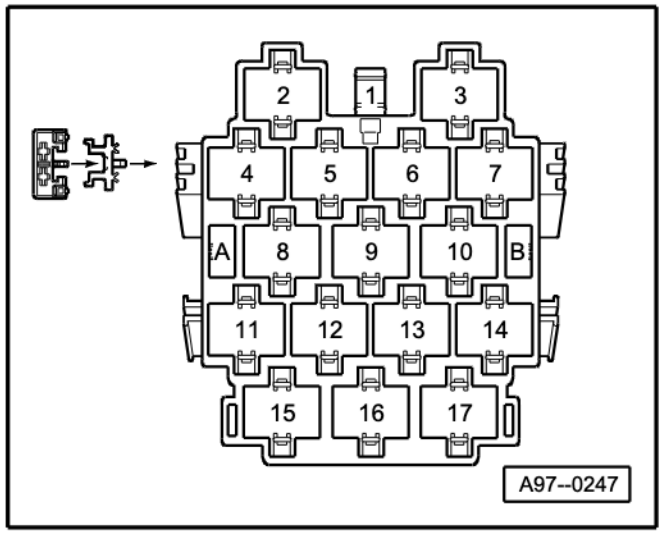

♦ behind side trim, left

9 - 17-Pin Connector, dark brown (T17g)

Protected by copyright. Copying for private or commercial purposes, in part or in whole, is not permitted unless authorised by AUDI AG. AUDI AG does not guarantee or accept any liability with respect to the correctness of information in this document. Copyright by AUDI AG.

10 - 17-Pin Connector, orange (T17f)
14 - 10-Pin Connector, grey (T10d)

4-Pin Relay Carrier with threaded connection

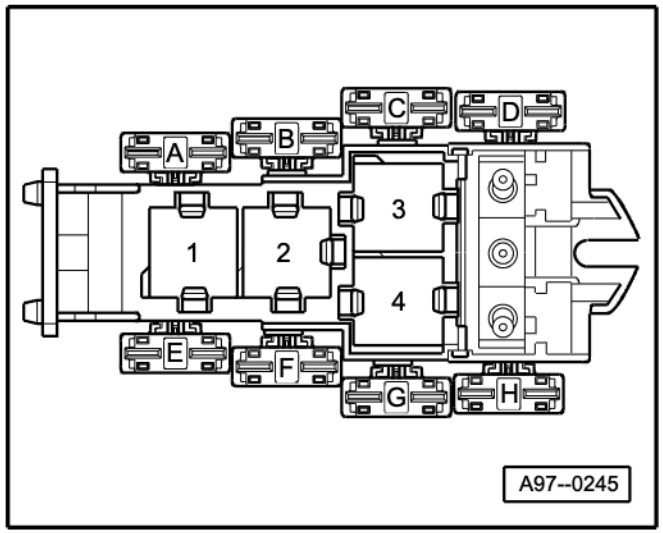

Protected by copyright. Copying for private or commercial purposes, in part or in whole, is not permitted unless authorised by AUDI AG. AUDI AG does not guarantee or accept any liability with respect to the correctness of information in this document. Copyright by AUDI AG.

- Instrument panel driver side

9-Pin Relay Carrier with Vehicle Electrical System Control Module

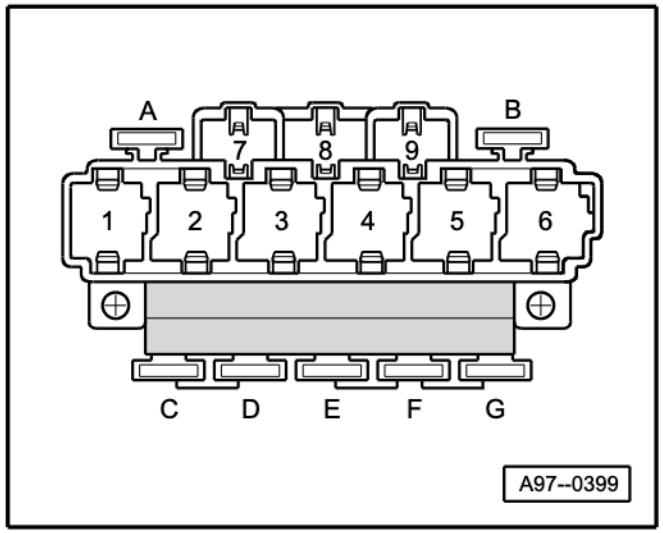

- Instrument panel driver side, behind 3-Pin Relay Carrier

D - Power Window Fuse 2 (S280)
F - Power Window Fuse (S37)

Protected by copyright. Copying for private or commercial purposes, in part or in whole, is not permitted unless authorised by AUDI AG. AUDI AG does not guarantee or accept any liability with respect to the correctness of information in this document. Copyright by AUDI AG.

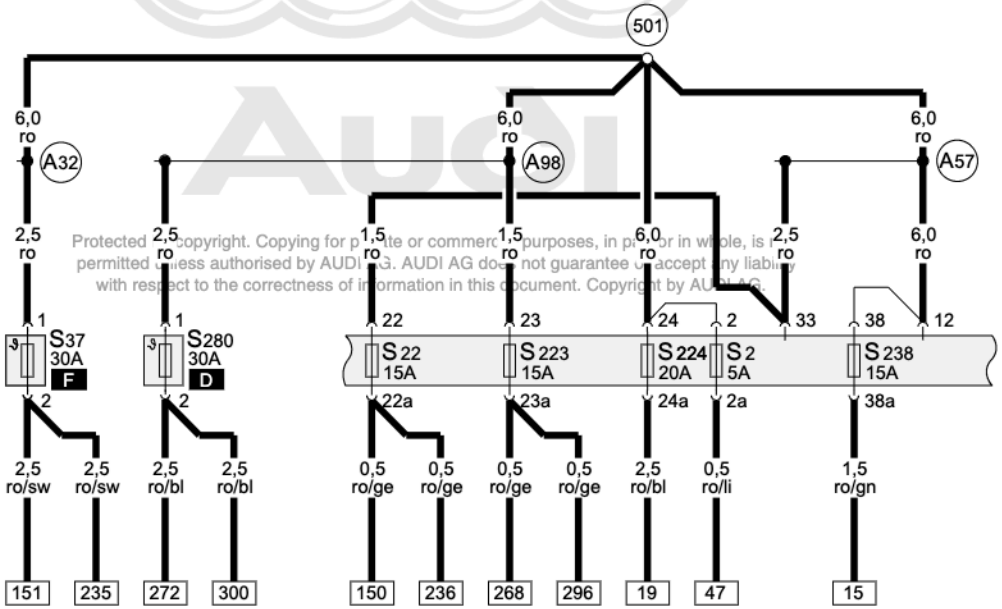

Protected by copyright. Copying for private or commercial purposes, in part or in whole, is not permitted unless authorised by AUDI AG. AUDI AG does not guarantee or accept any liability with respect to the correctness of information in this document. Copyright by AUDI AG.

Fuses, Ground connections

S2	Fuse in fuse holder/relay panel
S22	Fuse in fuse holder/relay panel
S37	Power Window Fuse
S223	Fuse in fuse holder
S224	Fuse in fuse holder
S238	Fuse in fuse holder
S280	Power Window Fuse 2
44	Ground connection (lower left A-pillar)
77	Ground connection (lower left B-pillar)
78	Ground Connection (lower right B-pillar)
249	Ground connection -2-, in wiring harness interior
277	Ground connection -3-, in wiring harness interior
347	Ground connection (in roof wiring harness)
501	Threaded connection -2- (30), on the relay plate
A32	Plus connection (30), in instrument panel wiring harness
A57	Plus connection -2- (30), in instrument panel wiring harness
A98	Plus connection -4- (30), in instrument panel wiring harness

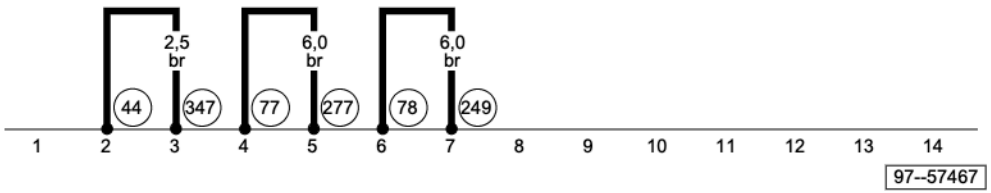

ws	=	white
sw	=	black
ro	=	red
br	=	brown
gn	=	green
bl	=	blue
gr	=	grey
li	=	lilac
ge	=	yellow
or	=	orange
rs	=	pink

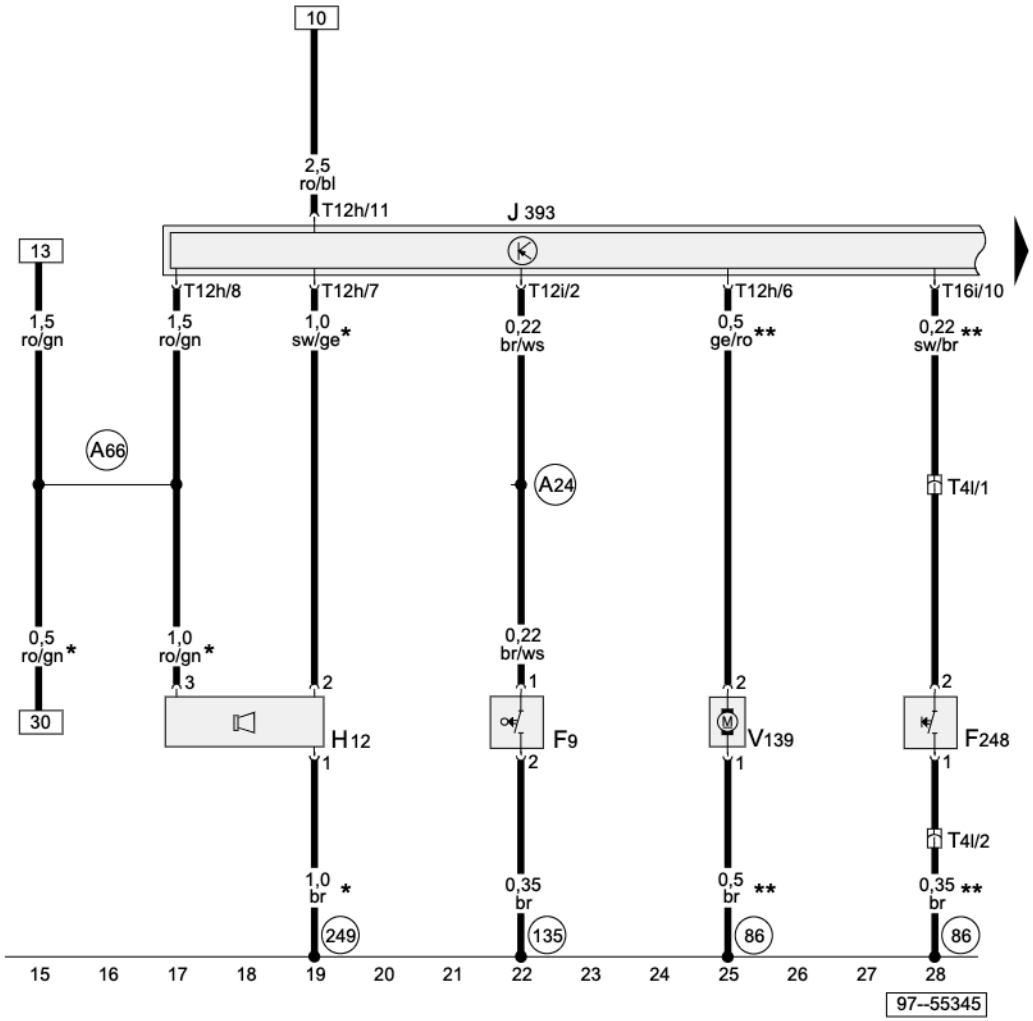

Central control module for comfort system, Motor to unlock rear lid

F9	Parking Brake Warning Light Switch
F248	Switch for unlocking, rear lid lock cylinder
H12	Alarm Horn
J393	Central control module for comfort system
T4l	4-Pin Connector, black, in rear lid
T12h	12-Pin Connector, black, on central control module for comfort system (used to be Connector 1)
T12i	12-Pin Connector, black, on central control module for comfort system (used to be Connector 3)
T16i	16-Pin Connector, brown, on central control module for comfort system (used to be Connector 5)
V139	Motor to unlock rear lid
86	Ground connection -1-, in rear wiring harness
135	Ground connection -2-, in instrument panel wiring harness
249	Ground connection -2-, in wiring harness interior
A24	Wire connection (brake system monitoring), in instrument panel wiring harness
A66	Connector (30a, central locking/anti-, theft warning system/IR), in instrument panel wiring harness
*	with alarm system only
**	for avant, see applicable avant rear wiring diagram

Protected by copyright. Copying for private or commercial purposes, in part or in whole, is not permitted unless authorised by AUDI AG. AUDI AG does not guarantee or accept any liability with respect to the correctness of information in this document. Copyright by AUDI AG.

ws	=	white
sw	=	black
ro	=	red
br	=	brown
gn	=	green
bl	=	blue
gr	=	grey
li	=	lilac
ge	=	yellow
or	=	orange
rs	=	pink

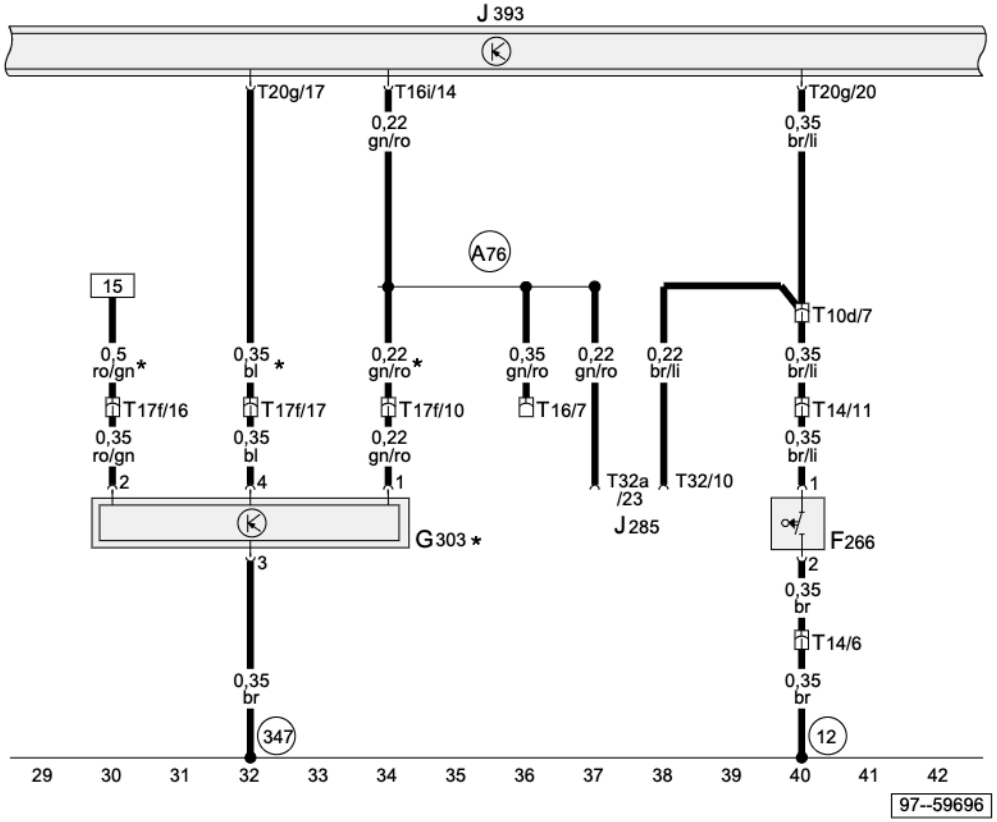

Central control module for comfort system, Front Hood Switch, Radar Interior Monitoring Control Module 1

F266	Front Hood Switch
G303	Radar Interior Monitoring Control Module 1
J285	Control module with indicator unit in instrument panel insert
J393	Central control module for comfort system
T10d	10-Pin Connector, grey, connector station A-pillar, left
T14	14-Pin Connector, black, in engine compartment, left
T16	16-Pin Connector, black, diagnostic connection
T16i	16-Pin Connector, brown, on central control module for comfort system (used to be Connector 5)
T17f	17-Pin Connector, orange, connector station A-pillar, left
T20g	20-Pin Connector, red, on central control module for comfort system (used to be Connector 4)
T32	32-Pin Connector, blue, on instrument panel insert
T32a	32-Pin Connector, green, on instrument panel insert
12	Ground connection, in engine compartment, left
347	Ground Connection (in roof wiring harness)
A76	Wire connection (K-diagnosis wire), in instrument panel wiring harness
*	with alarm system only, discontinued from 2003 m. y. (phased in modification)

Protected by copyright. Copying for private or commercial purposes, in part or in whole, is not permitted unless authorised by AUDI AG. AUDI AG does not guarantee or accept any liability with respect to the correctness of information in this document. Copyright by AUDI AG.

ws	=	white
sw	=	black
ro	=	red
br	=	brown
gn	=	green
bl	=	blue
gr	=	grey
li	=	lilac
ge	=	yellow
or	=	orange
rs	=	pink

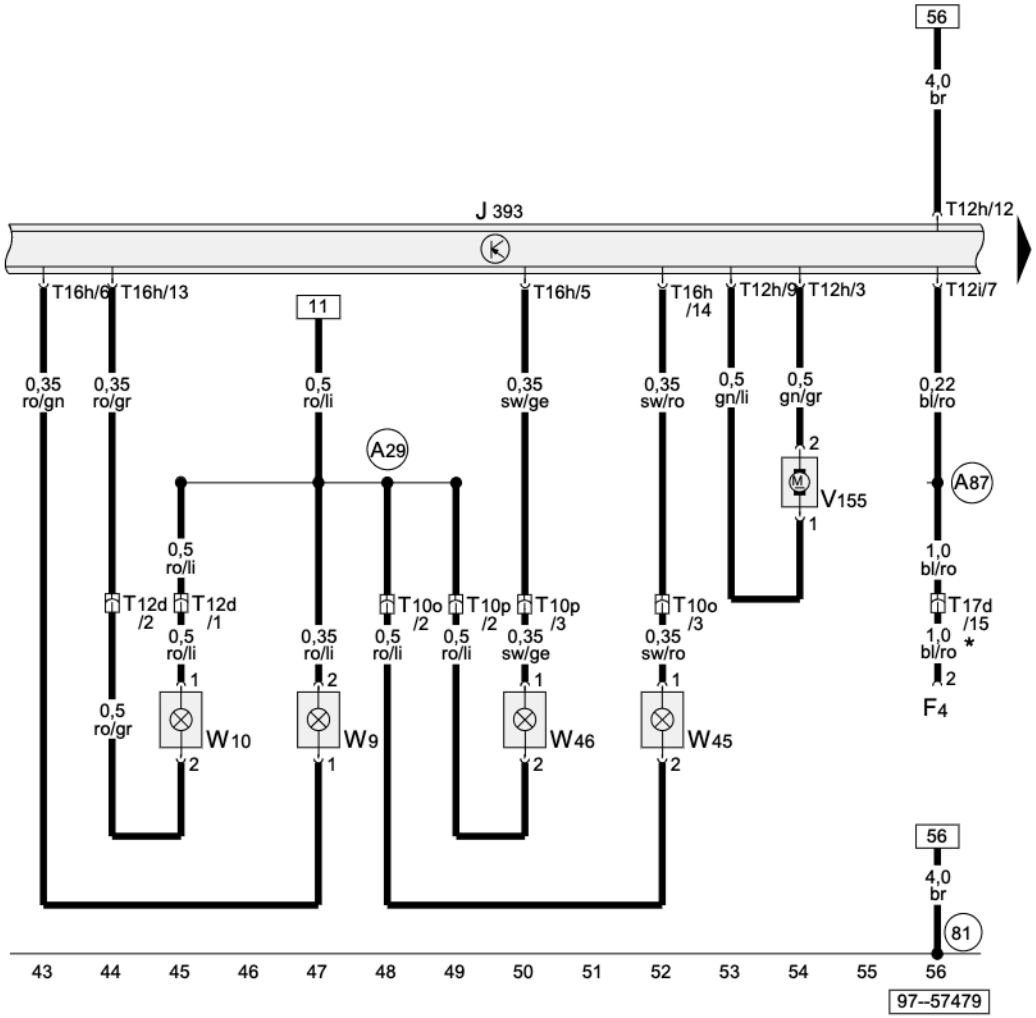

ws	=	white
sw	=	black
ro	=	red
br	=	brown
gn	=	green
bl	=	blue
gr	=	grey
li	=	lilac
ge	=	yellow
or	=	orange
rs	=	pink

Central control module for comfort system, Motor for fuel tank lid unlock, Footwell Lights

F4	Back-Up Light Switch
J393	Central control module for comfort system
T10o	10-Pin Connector, red, seat wiring connector station, driver seat
T10p	10-Pin Connector, red, seat wiring connector station, passenger's seat
T12d	12-Pin Connector, brown, near glove Compartment
T12h	12-Pin Connector, black, on central control module for comfort system (used to be Connector 1)
T12i	12-Pin Connector, black, on central control module for comfort system (used to be Connector 3)
T16h	16-Pin Connector, black, on central control module for comfort system (used to be Connector 2)
T17d	17-Pin Connector, red, connector station E-box, plenum chamber
V155	Motor for fuel tank lid unlock
W9	Left Footwell Light
W10	Right Footwell Light
W45	Left Rear Footwell Light
W46	Right Rear Footwell Light

Provided by eSoftight. Copying for private or commercial purposes, in part or in whole, is not permitted unless authorised by AUDI AG. AUDI AG does not guarantee or accept any liability with respect to the correctness of information in this document. Copyright by AUDI AG.

81	Ground connection -1-, in instrument panel wiring harness
A29	wire connection (interior light), in instrument panel wiring harness
A87	Connector (reverse lamp), in instrument panel wiring harness
*	Manual transmission only

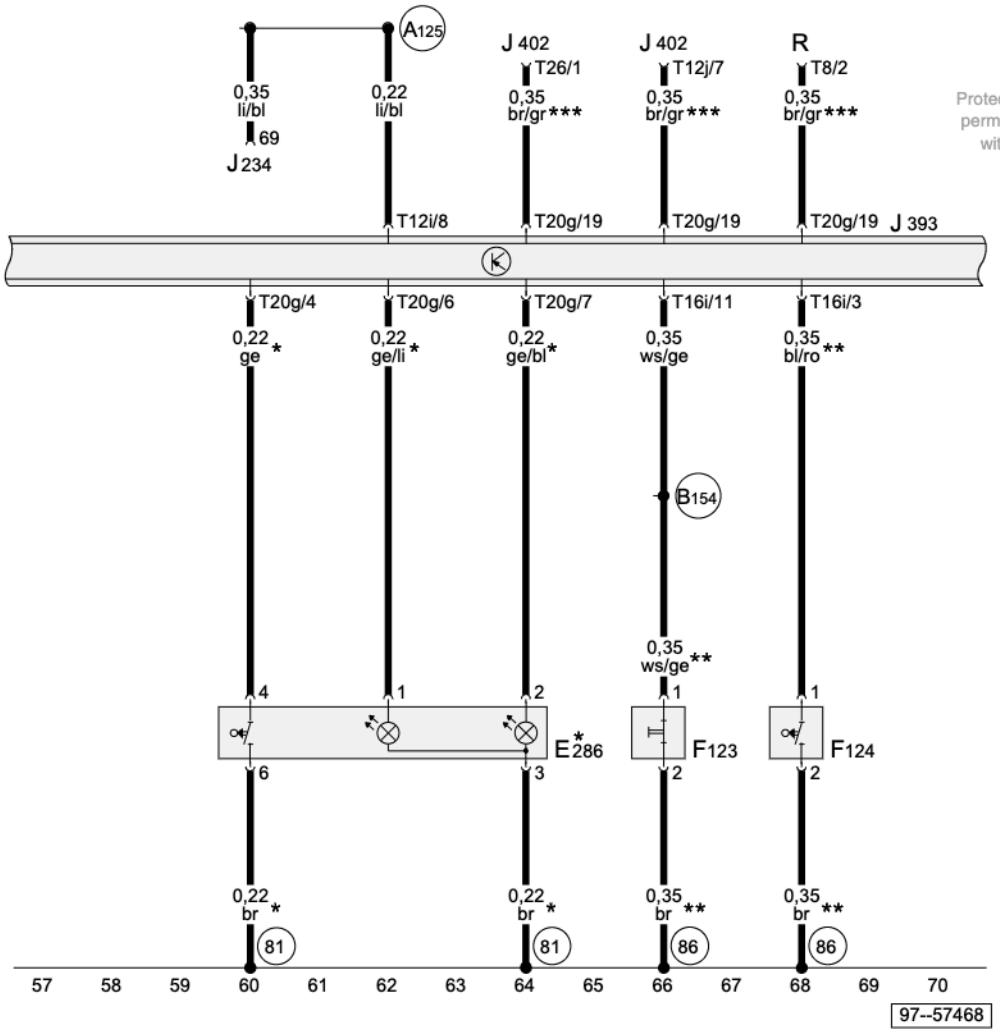

Central control module for comfort system, Trunk Lid Alarm Switch, Trunk Lock Alarm/Central Locking Switch, Rear/ Center Central Locking Switch

E286	Rear/Center Central Locking Switch
F123	Trunk Lid Alarm Switch
F124	Trunk Lock Alarm/Central Locking Switch
J234	Airbag Control Module
J393	Central control module for comfort system
J402	Control module for operating electronics, navigation
R	Radio
T8	8-Pin Connector, black, radio connector III
T12i	12-Pin Connector, black, on central control module for comfort system (used to be Connector 3)
T12j	12-Pin Connector, green, on Control module for operating electronics, navigation
T16i	16-Pin Connector, brown, on central control module for comfort system (used to be Connector 5)
T20g	20-Pin Connector, red, on central control module for comfort system (used to be Connector 4)
T26	26-Pin Connector, black, on Control Module for operating electronics, navigation
81	Ground connection -1-, in instrument panel wiring harness
86	Ground connection -1-, in rear wiring harness
A125	Wire connection (crash signal), in instrument panel wiring harness
B154	Connector -1- (TK), in wiring harness interior
*	if it exixts
**	for avant, see applicable avant rear wiring diagram
***	if it exixts (for alarm system)

Protected by copyright. Copying for private or commercial purposes, in part or in whole, is not permitted unless authorised by AUDI AG. AUDI AG does not guarantee or assume any liability with respect to the correctness of information in this document. Copyright by AUDI AG.

ws	=	white
sw	=	black
ro	=	red
br	=	brown
gn	=	green
bl	=	blue
gr	=	grey
li	=	lilac
ge	=	yellow
or	=	orange
rs	=	pink

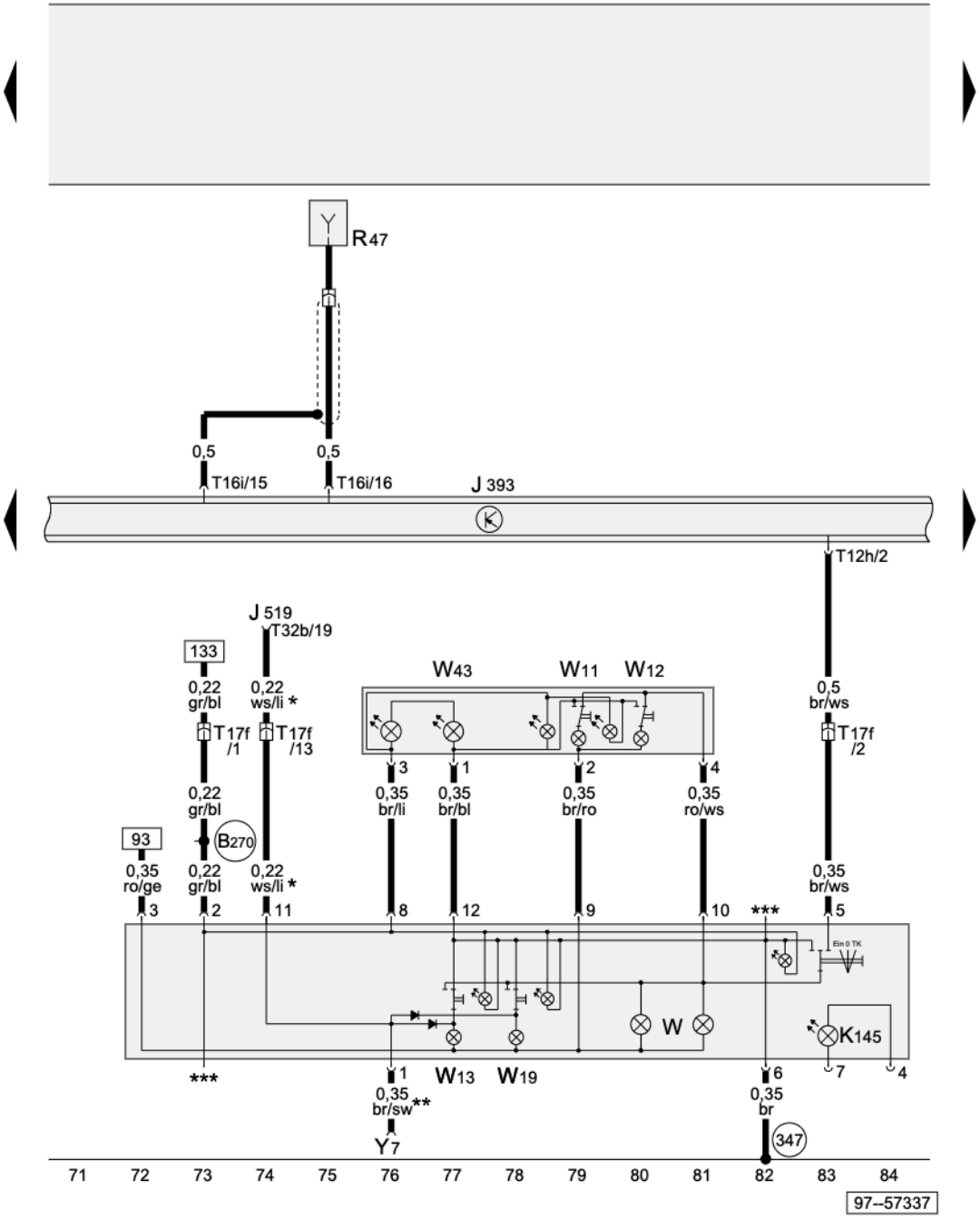

Central control module for comfort system, Antenna, Front Interior Light, Reading Lights

J393	Central control module for comfort system
J519	Vehicle Electrical System Control Module
K145	Warning light for airbag off, passenger side
R47	Central Locking and Anti-theft Alarm System Antenna
T12h	12-Pin Connector, black, on central control module for comfort system (used to be Connector 1)
T16i	16-Pin Connector, brown, on central control module for comfort system (used to be Connector 5)
T17f	17-Pin Connector, orange, connector station A-pillar, left
T32b	32-Pin Connector, grey, on vehicle Electrical System Control Module
W	Front Interior Light
W11	Left Rear Reading Light
W12	Right Rear Reading Light
W13	Passenger's Map/Reading Light
W19	Left Front Reading Light
W43	Rear courtesy lamp
Y7	Automatic Day/Night Interior Mirror
347	Ground Connection (in roof wiring harness)
B270	Connector (58s), in roof wiring harness
*	with Automatic headlights assistent / coming-/leavinghome function only
**	with Automatic Day/Night Interior Mirror only
***	see applicable sliding / tilting sunroof wiring diagram

Protected by copyright. Copying for private or commercial purposes, in part or in whole, is not permitted unless authorised by AUDI AG. AUDI AG does not guarantee or accept any liability with respect to the correctness of information in this document. Copyright by AUDI AG.

ws	=	white
sw	=	black
ro	=	red
br	=	brown
gn	=	green
bl	=	blue
gr	=	grey
li	=	lilac
ge	=	yellow
or	=	orange
rs	=	pink

Central control module for comfort system, Luggage Compartment Lights, Glove Compartment Light, Make-up Mirror Lights

E26	Glove Compartment light
F147	Left Make-Up Mirror Light Switch
F148	Right Make-Up Mirror Light Switch
J393	Central control module for comfort system
L31	Make-up Mirror Light
T12d	12-Pin Connector, brown, near glove Compartment
T12h	12-Pin Connector, black, on central control module for comfort system (used to be Connector 1)
T17f	17-Pin Connector, orange, connector station A-pillar, left
W6	Glove Compartment Light
W18	Left Luggage Compartment Light
W35	Luggage Compartment Light, right
238	Ground connection -1-, in wiring harness interior
347	Ground connection (in roof wiring harness)
B250	Plus Connection (in roof wiring harness)
*	for avant, see applicable avant rear wiring diagram
**	if it exixts

Protected by copyright. Copying for private or commercial purposes, in part or in whole, is not permitted unless authorised by AUDI AG. AUDI AG does not guarantee or accept any liability with respect to the correctness of information in this document. Copyright by AUDI AG.

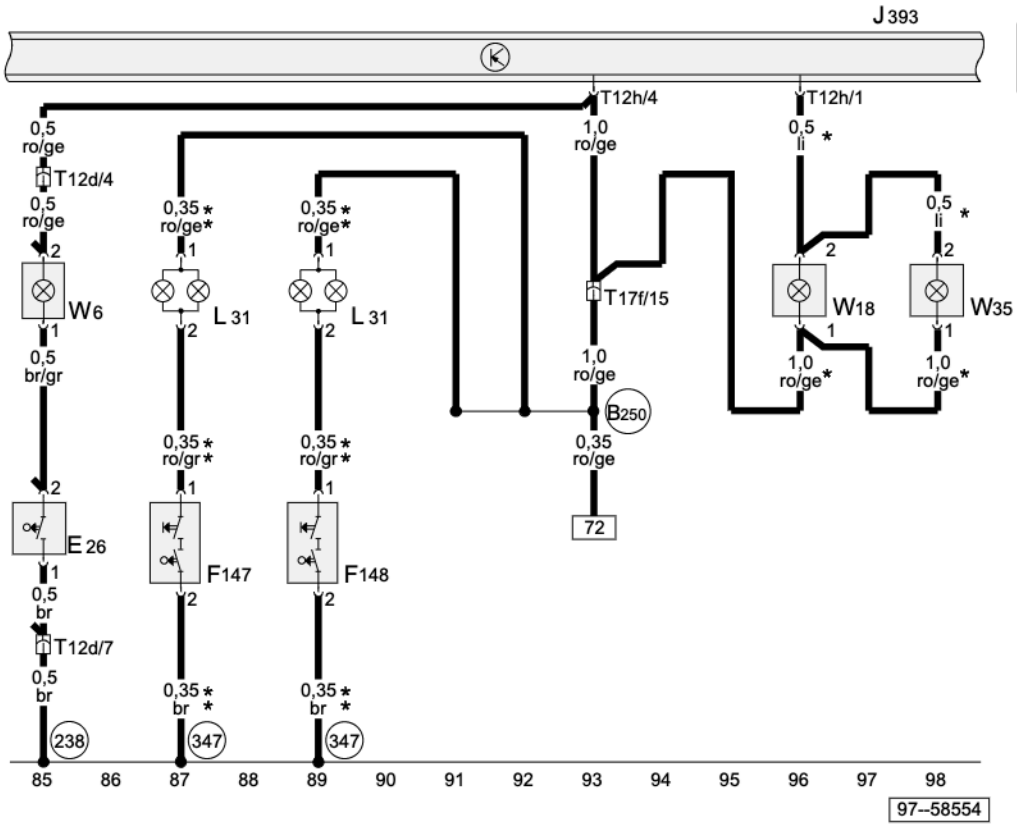

ws	=	white
sw	=	black
ro	=	red
br	=	brown
gn	=	green
bl	=	blue
gr	=	grey
li	=	lilac
ge	=	yellow
or	=	orange
rs	=	pink

Central control module for comfort system, Lock unit for central locking, rear, left, without window regulator rear

F10	Left Rear Door Contact Switch
F132	Left Rear Central Locking System Activator/Switch
F222	Lock unit for central locking, rear, left
F245	Adjusting element for central locking (safe), left rear door
J393	Central control module for comfort system
T16h	16-Pin Connector, black, on central control module for comfort system (used to be Connector 2)
T20b	20-Pin Connector, black, door B-pillar, left
T20g	20-Pin Connector, red, on central control module for comfort system (used to be Connector 4)
V115	Left Rear Central Locking System Motor
V163	Left Rear Central Locking (Safe) Motor
207	Ground connection, in left rear door wiring harness
277	Ground connection -3-, in wiring harness interior

Protected by copyright. Copying for private or commercial purposes, in part or in whole, is not permitted unless authorised by AUDI AG. AUDI AG does not guarantee or accept any liability with respect to the correctness of information in this document. Copyright by AUDI AG.

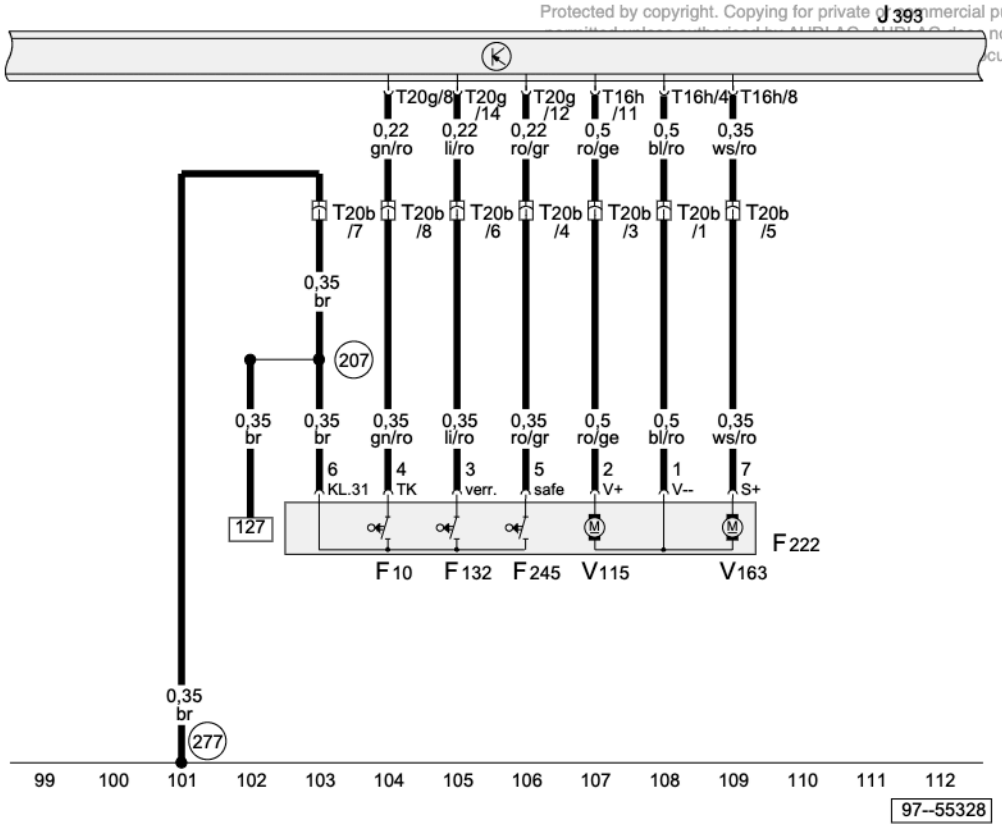

ws	=	white
sw	=	black
ro	=	red
br	=	brown
gn	=	green
bl	=	blue
gr	=	grey
li	=	lilac
ge	=	yellow
or	=	orange
rs	=	pink

Central control module for comfort system, Lock unit for central locking, rear, right, without window regulator rear

F11	Right Rear Door Contact Switch
F134	Right Rear Central Locking System Activator/Switch
F223	Lock unit for central locking, rear, right
F246	Adjusting element for central locking (safe), right rear door
J393	Central control module for comfort system
T16h	16-Pin Connector, black, on central control module for comfort system (used to be Connector 2)
T20c	20-Pin Connector, black, door B-pillar, right
T20g	20-Pin Connector, red, on central control module for comfort system (used to be Connector 4)
V97	Double Cab Right Rear Door Central Locking System Motor
V164	Right Rear Central Locking (Safe) Motor
208	Ground connection, in right rear door wiring harness
249	Ground connection -2-, in wiring harness interior

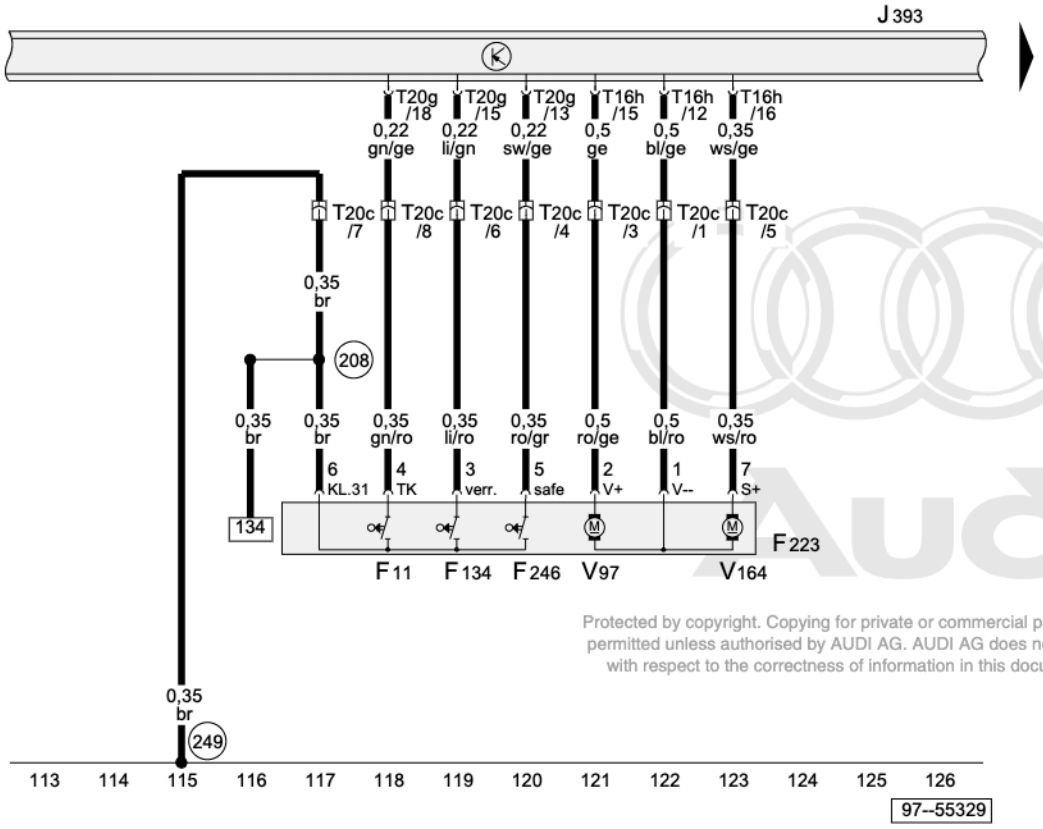

ws	=	white
sw	=	black
ro	=	red
br	=	brown
gn	=	green
bl	=	blue
gr	=	grey
li	=	lilac
ge	=	yellow
or	=	orange
rs	=	pink

Protected by copyright. Copying for private or commercial purposes, in part or in whole, is not permitted unless authorised by AUDI AG. AUDI AG does not guarantee or accept any liability with respect to the correctness of information in this document. Copyright by AUDI AG.

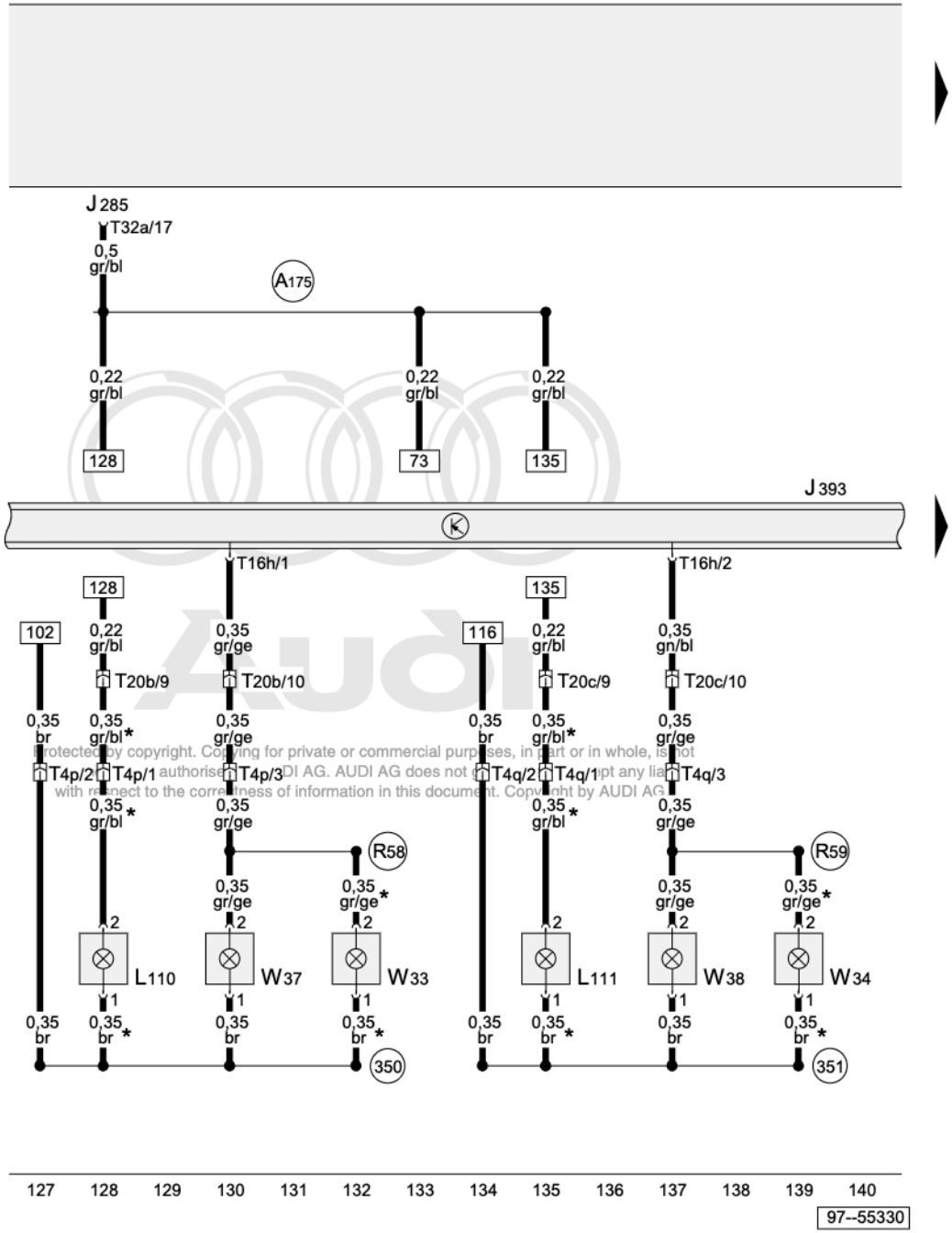

Protected by copyright. Copying for private or commercial purposes, in part or in whole, is not authorised by AUDI AG. AUDI AG does not guarantee or accept any liability with respect to the correctness of information in this document. Copyright by AUDI AG.

Central control module for comfort system, Entry lights, Door warning lights, Door opener lightings, without window regulator rear

J285	Control module with indicator unit in instrument panel insert
J393	Central control module for comfort system
L110	Door opener lighting, left rear
L111	Door opener lighting, right rear
T4p	4-Pin Connector, black, in the door, rear, left
T4q	4-Pin Connector, black, in the door, rear, right
T16h	16-Pin Connector, black, on central control module for comfort system (used to be Connector 2)
T20b	20-Pin Connector, black, door B-pillar, left
T20c	20-Pin Connector, black, door B-pillar, right
T32a	32-Pin Connector, green, on instrument panel insert
W33	Entry light rear, left
W34	Entry light rear, right
W37	Door warning light rear, left
W38	Door warning light rear, right
350	Ground connection -2- (in left rear door wiring harnesss)
351	Ground connection -2- (in right rear door wiring harnesss)
A175	Wire connection (58s), in instrument panel wiring harness
R58	Courtesy Light Connection (in left rear door wiring harness)
R59	Courtesy Light Connection (in right rear door wiring harness)
*	if it exixts

ws	=	white
sw	=	black
ro	=	red
br	=	brown
gn	=	green
bl	=	blue
gr	=	grey
li	=	lilac
ge	=	yellow
or	=	orange
rs	=	pink

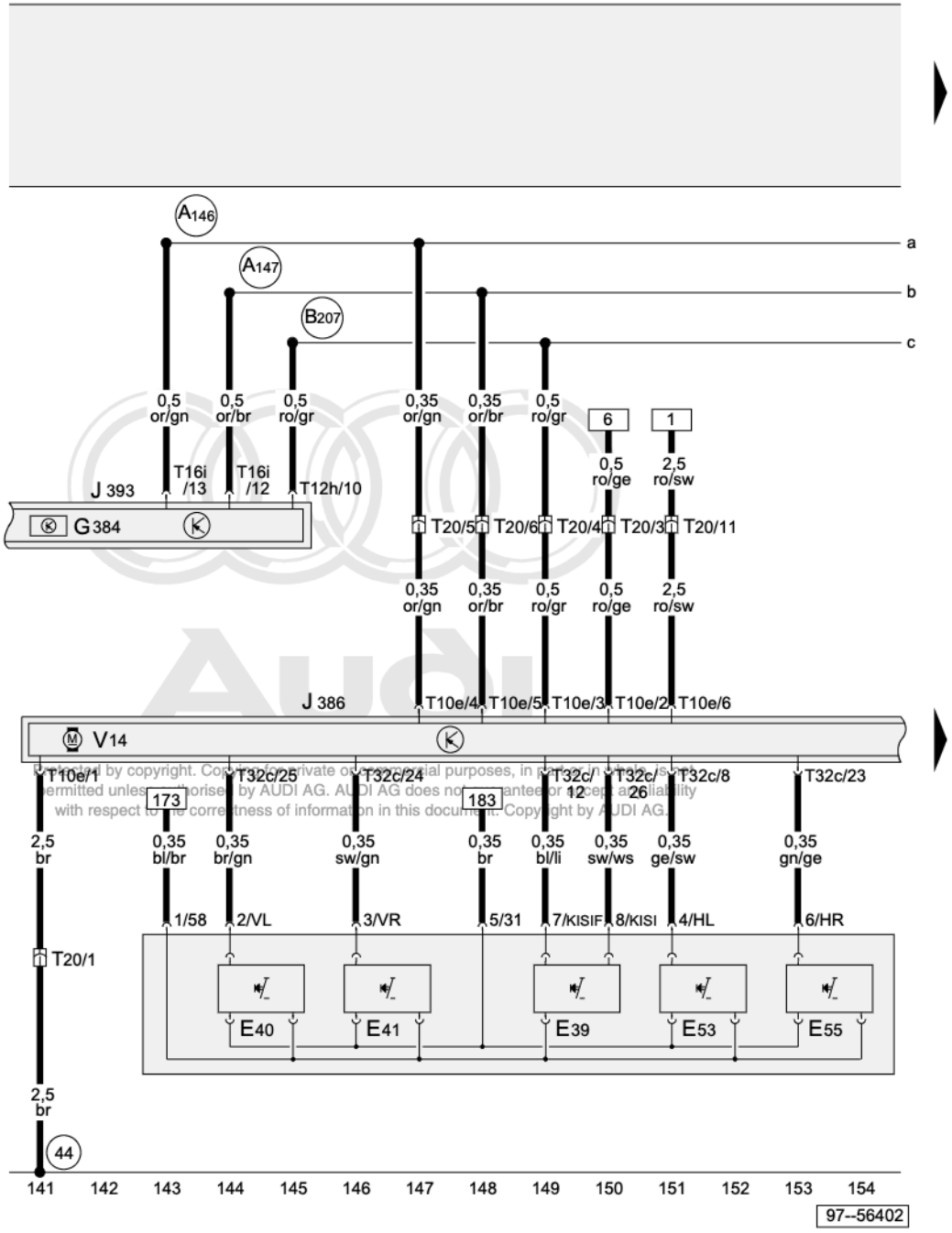

Protected by copyright. Copying for private or commercial purposes, in part or in whole, is not permitted unless authorised by AUDI AG. AUDI AG does not guarantee or accept any liability with respect to the correctness of information in this document. Copyright by AUDI AG.

Central control module for comfort system, Door control module, driver side with window regulator, Switch for window regulator, Vehicle Inclination Sensor

E39	Safety switch for window regulator rear
E40	Switch for window regulator front left
E41	Switch for window regulator front right
E53	Switch for window regulator rear left, driver
E55	Switch for window regulator rear right, driver
G384	Vehicle Inclination Sensor
J386	Door control module, driver side
J393	Central control module for comfort system
T10e	10-Pin Connector, black, on door control module, driver's door
T12h	12-Pin Connector, black, on central control module for comfort system (used to be Connector 1)
T16i	16-Pin Connector, brown, on central control module for comfort system (used to be Connector 5)
T20	20-Pin Connector, black, door A-pillar, left
T32c	32-Pin Connector, grey, door control module, driver's door
V14	Left Window Motor
44	Ground connection (lower left A-pillar)
A146	Comfort System High-bus Connection (in instrument panel wiring harness)
A147	Comfort System Low-bus Connection (in instrument panel wiring harness)
B207	Connection (comfort), in passenger compartment wiring harness

ws	=	white
sw	=	black
ro	=	red
br	=	brown
gn	=	green
bl	=	blue
gr	=	grey
li	=	lilac
ge	=	yellow
or	=	orange
rs	=	pink

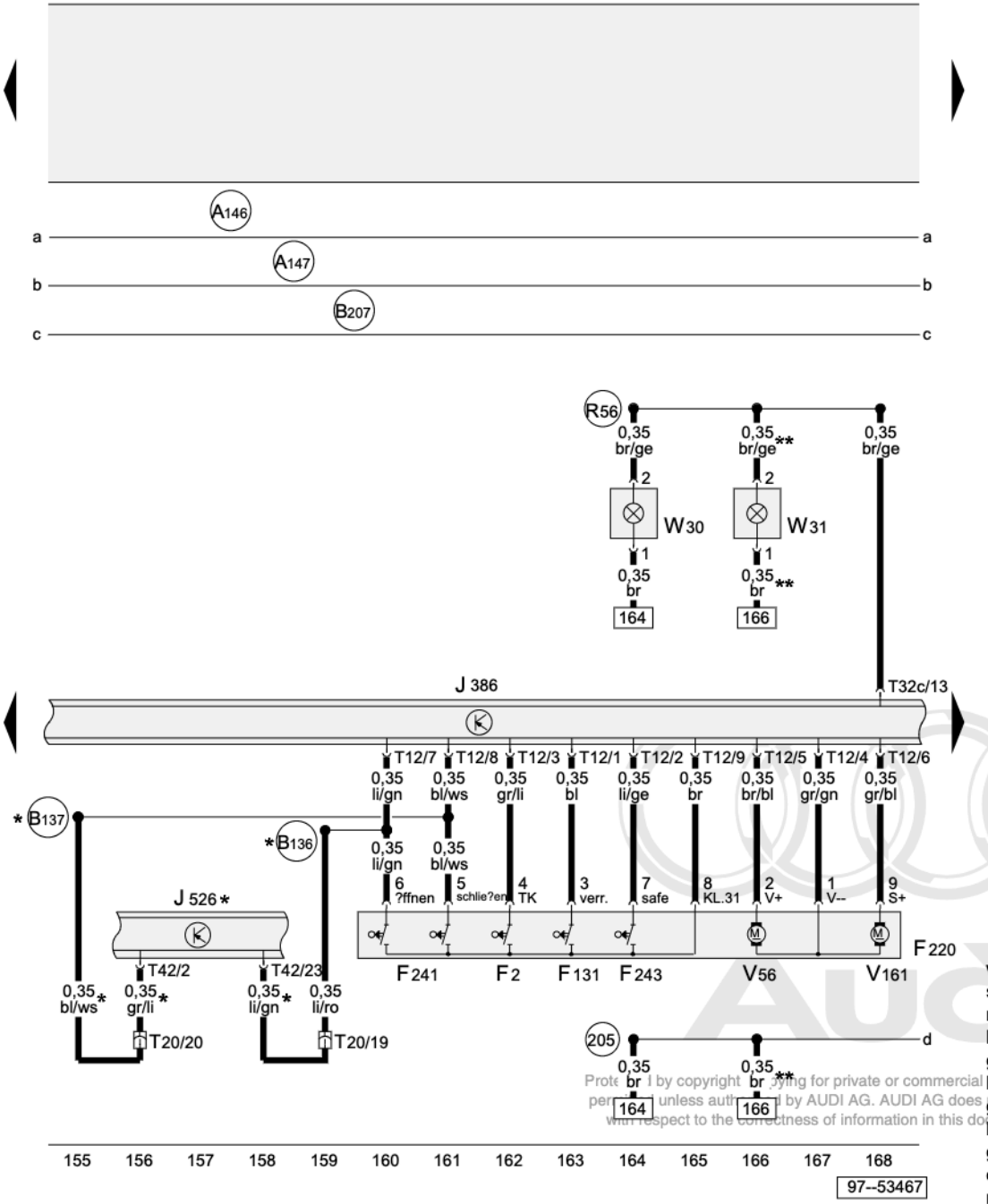

Protected by copyright. Copying for private or commercial purposes, in part or in whole, is not permitted unless authorised by AUDI AG. AUDI AG does not guarantee or accept any liability with respect to the correctness of information in this document. Copyright by AUDI AG.

Door control module, driver side with window regulator, Lock unit for central locking, driver side, Door warning light, Entry light

F2	Door contact Switch - Driver's side
F131	Left Front Central Locking System Activator/Switch
F220	Lock unit for central locking, driver side
F241	Contact switch for lock cylinder, driver side
F243	Adjusting element for central locking (safe), driver door
J386	Door control module, driver side
J526	Telephone/Telematic Control Module
T12	12-Pin Connector, black, on door control module, driver's door
T20	20-Pin Connector, black, door A-pillar, left
T32c	32-Pin Connector, grey, door control module, driver's door
T42	42-Pin Connector, blue, on Telephone Transceiver
V56	Driver's Door Central Locking System Motor
V161	Driver's Door Central Locking (Safe) Motor
W30	Door warning light, driver side
W31	Entry light front, left
205	Ground connection, in driver's door wiring harness
A146	Comfort System High-bus Connection (in instrument panel wiring harness)
A147	Comfort System Low-bus Connection (in instrument panel wiring harness)
B136	Connector (open-comfort system), in interior wiring harness window regulator
B137	Connector (closed-comfort system), in interior wiring harness window regulator
B207	Connection (comfort), in passenger compartment wiring harness
R56	Courtesy Light Connection (in left front door wiring harness)
*	with Telematic only
**	if it exixts

ws	=	white
sw	=	black
ro	=	red
br	=	brown
gn	=	green
bl	=	blue
gr	=	grey
li	=	lilac
ge	=	yellow
or	=	orange
rs	=	pink

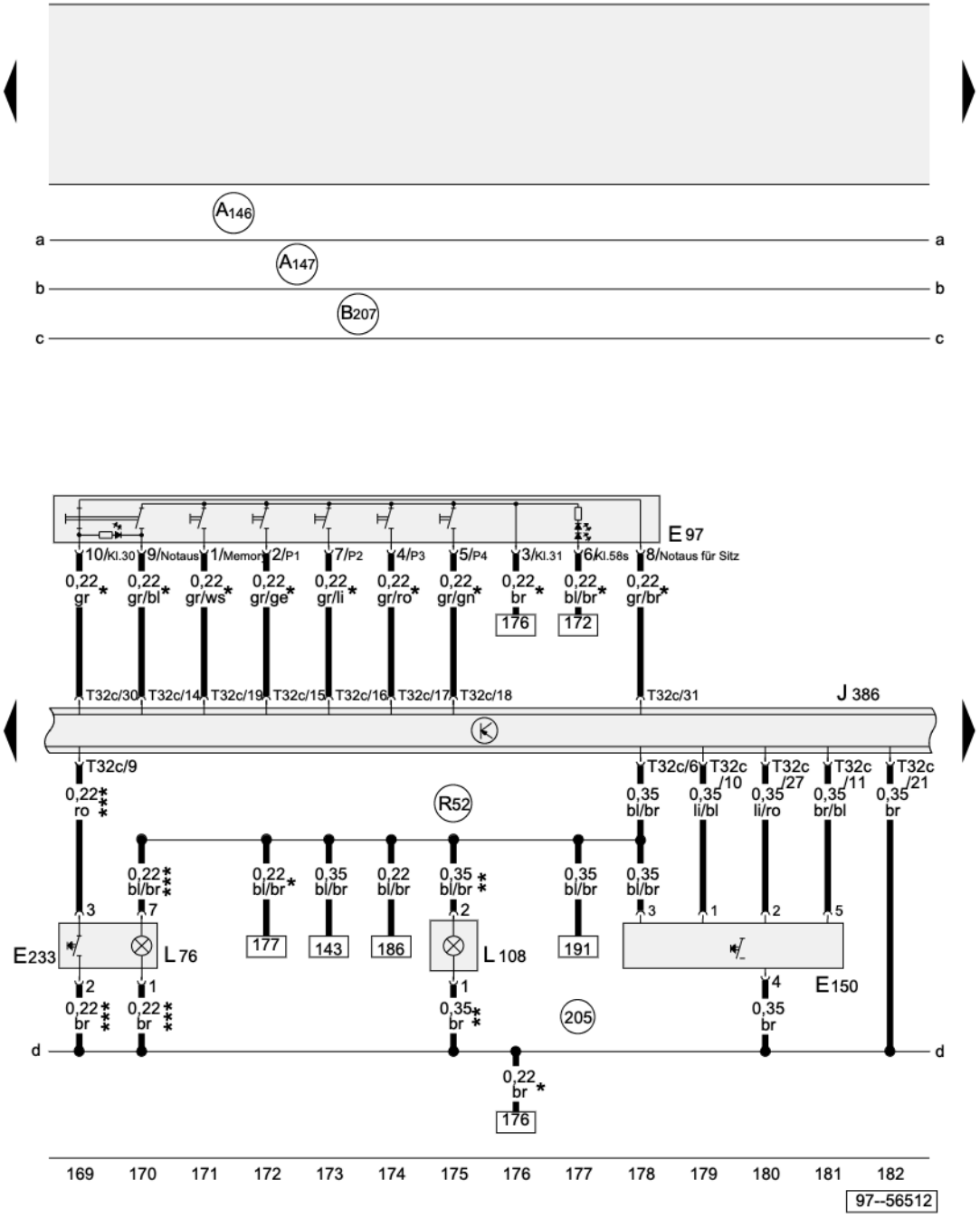

Door control module, driver side with window regulator, Switch for interior lock, Driver's Seat Memory Program Control, Door opener lighting

E97	Driver's Seat Memory Program Control
E150	Switch for interior lock, driver side
E233	Switch for rear lid remote control lock
J386	Door control module, driver side
L76	Push Button Light
L108	Door opener lighting, driver side
T32c	32-Pin Connector, grey, door control module, driver's door
205	Ground connection, in driver's door wiring harness
A146	Comfort System High-bus Connection (in instrument panel wiring harness)
A147	Comfort System Low-bus Connection (in instrument panel wiring harness)
B207	Connection (comfort), in passenger compartment wiring harness
R52	Connection (58s) (in left front door wiring harness)
*	with Electric seat adjustment with memory function only
**	if it exixts
***	Not for all countries

ws	=	white
sw	=	black
ro	=	red
br	=	brown
gn	=	green
bl	=	blue
gr	=	grey
li	=	lilac
ge	=	yellow
or	=	orange
rs	=	pink

Protected by copyright. Copying for private or commercial purposes, in part or in whole, is not permitted unless authorised by AUDI AG. AUDI AG does not guarantee or accept any liability with respect to the correctness of information in this document. Copyright by AUDI AG.

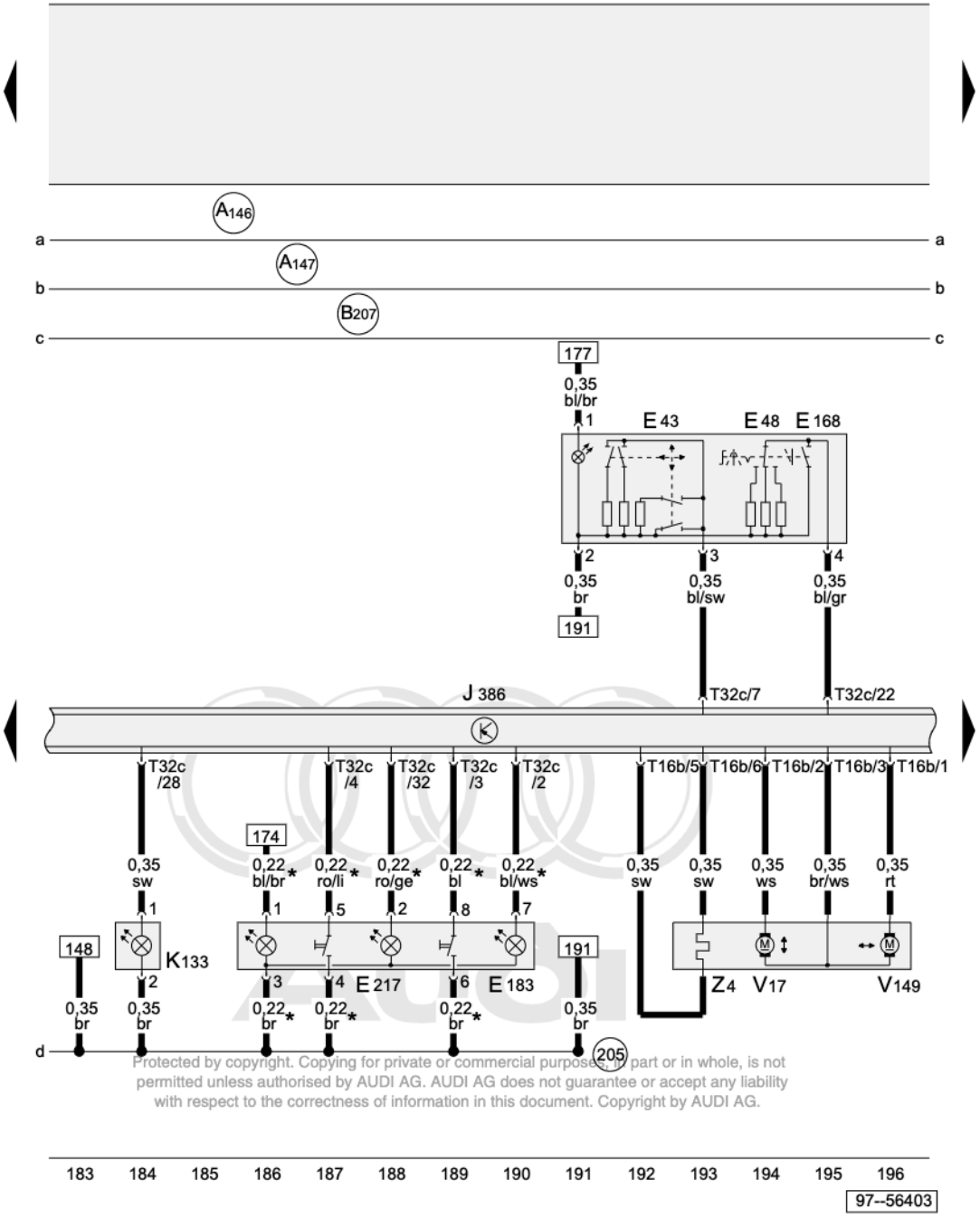

Protected by copyright. Copying for private or commercial purposes, in part or in whole, is not permitted unless authorised by AUDI AG. AUDI AG does not guarantee or accept any liability with respect to the correctness of information in this document. Copyright by AUDI AG.

Door control module, driver side with window regulator, Mirror Adjustment, Switch for passenger compartment monitoring, Switch for alarm system off, Mirror Adjustment Switch

E43	Mirror Adjustment Switch
E48	Mirror Selector Switch
E168	Switch for Mirror Adjustment with Fold-Away Function
E183	Switch for passenger compartment monitoring
E217	Switch for alarm system off
J386	Door control module, driver side
K133	Warning light for central locking -SAFE-
T16b	16-Pin Connector, on door control module, driver's door
T32c	32-Pin Connector, grey, door control module, driver's door
V17	Driver's Side Mirror Adjustment Motor
V149	Driver's Side Mirror Adjustment Motor
Z4	Heated outside mirror, driver side
205	Ground connection, in driver's door wiring harness
A146	Comfort System High-bus Connection (in instrument panel wiring harness)
A147	Comfort System Low-bus Connection (in instrument panel wiring harness)
B207	Connection (comfort), in passenger compartment wiring harness
*	with alarm system only, discontinued from 2003 m. y. (phased in modification)

ws	=	white
sw	=	black
ro	=	red
br	=	brown
gn	=	green
bl	=	blue
gr	=	grey
li	=	lilac
ge	=	yellow
or	=	orange
rs	=	pink

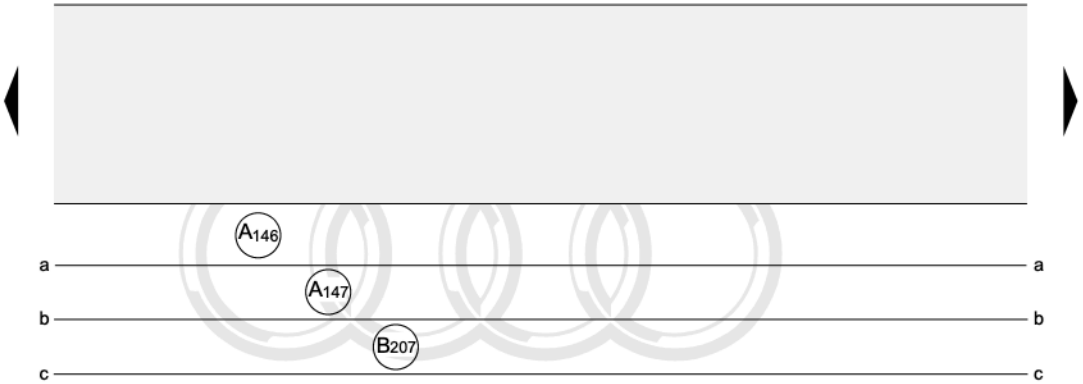

Protected by copyright. Copying for private or commercial purposes, in part or in whole, is not permitted unless authorised by AUDI AG. AUDI AG does not guarantee or accept any liability with respect to the correctness of information in this document. Copyright by AUDI AG.

Door control module, driver side with window regulator, Mirror Adjustment with fold-away function

J386	Door control module, driver side
T16b	16-Pin Connector, on door control module, driver's door
V17	Driver's Side Mirror Adjustment Motor
V121	Motor for fold-in mirror, driver side
V149	Driver's Side Mirror Adjustment Motor
Z4	Heated outside mirror, driver side
A146	Comfort System High-bus Connection (in instrument panel wiring harness)
A147	Comfort System Low-bus Connection (in instrument panel wiring harness)
B207	Connection (comfort), in passenger compartment wiring harness

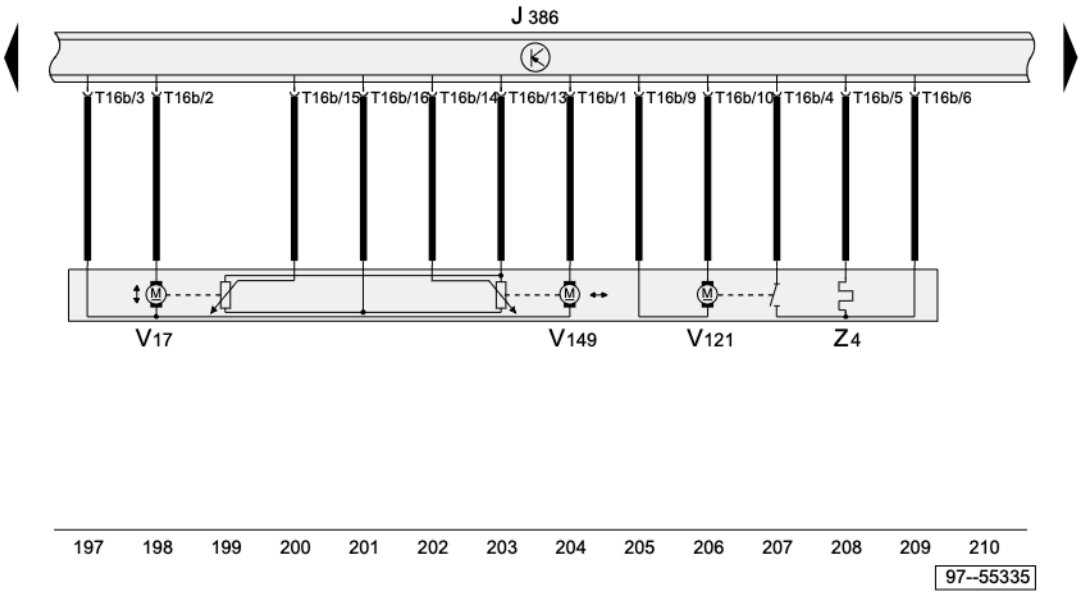

ws	=	white
sw	=	black
ro	=	red
br	=	brown
gn	=	green
bl	=	blue
gr	=	grey
li	=	lilac
ge	=	yellow
or	=	orange
rs	=	pink

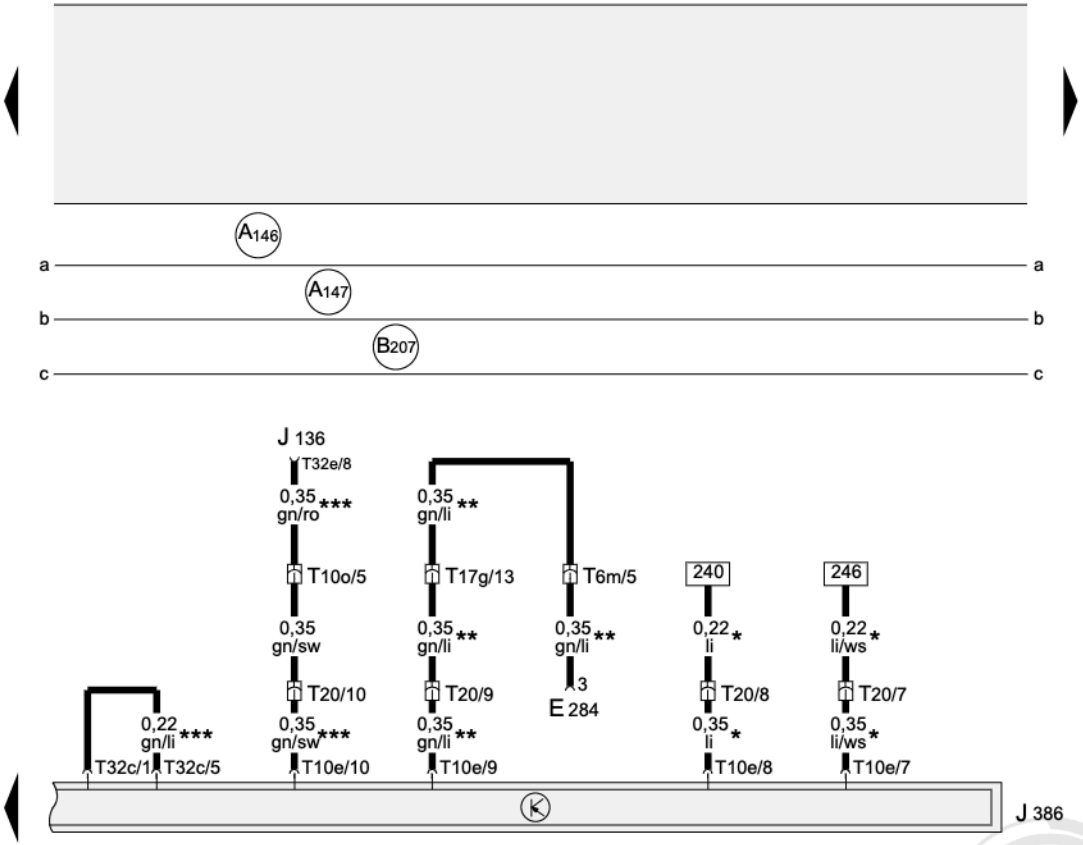

Door control module, driver side with window regulator, Garage Door Opener Control Head, Memory Seat Control Module

E284	Garage Door Opener Control Head
J136	Memory Seat Control Module
J386	Door control module, driver side
T6m	6-Pin Connector, on the Garage Door Opener Control Head
T10e	10-Pin Connector, black, on door control module, driver's door
T10o	10-Pin Connector, red, seat wiring connector station, driver seat
T17g	17-Pin Connector, dark brown, connector station A-pillar, left
T20	20-Pin Connector, black, door A-pillar, left
T32c	32-Pin Connector, grey, door control module, driver's door
T32e	32-Pin Conenctor, Memory power Seat Control module
A146	Comfort System High-bus Connection (in instrument panel wiring harness)
A147	Comfort System Low-bus Connection (in instrument panel wiring harness)
B207	Connection (comfort), in passenger compartment wiring harness
*	with Automatic Day/Night Interior Mirror only
**	with Garage Door Opener only
***	with Electric seat adjustment with memory function only

ws	=	white
sw	=	black
ro	=	red
br	=	brown
gn	=	green
bl	=	blue
gr	=	grey
li	=	lilac
ge	=	yellow
or	=	orange
rs	=	pink

Protected by copyright. Copying for private or commercial purposes, in part or in whole, is not permitted unless authorised by AUDI AG. AUDI AG does not guarantee or accept any liability with respect to the correctness of information in this document. Copyright by AUDI AG.

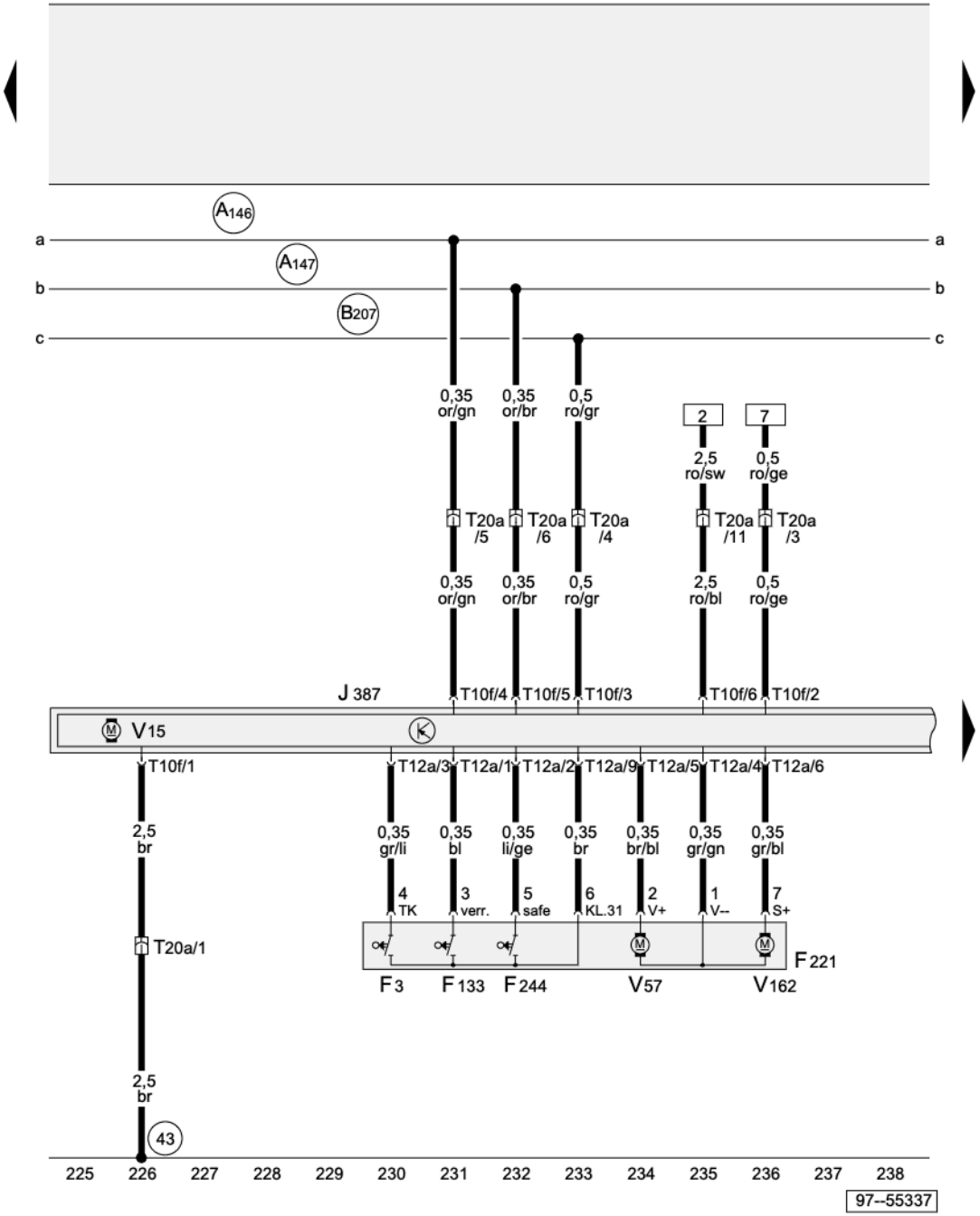

Door control module, passanger side with window regulator, Lock unit for central locking, passenger side

F3	Door contact Switch - Passenger's side
F133	Right Front Central Locking System Activator/Switch
F221	Lock unit for central locking, passenger side
F244	Adjusting element for central locking (safe), passenger door
J387	Door control module, passenger side
T10f	10-Pin Connector, black, on door control module, passenger door
T12a	12-Pin Connector, black, on door control module, passenger's door
T20a	20-Pin Connector, black, door A-pillar, right
V15	Right Window Motor
V57	Passenger's Door Central Locking System Motor
V162	Front Passenger's Central Locking (Safe) Motor
43	Ground connection (lower right A-pillar)
A146	Comfort System High-bus Connection (in instrument panel wiring harness)
A147	Comfort System Low-bus Connection (in instrument panel wiring harness)
B207	Connection (comfort), in passenger compartment wiring harness

Protected by copyright. Copying for private or commercial purposes, in part or in whole, is not permitted unless authorised by AUDI AG. AUDI AG does not guarantee or accept any liability with respect to the correctness of information in this document. Copyright by AUDI AG.

ws	=	white
sw	=	black
ro	=	red
br	=	brown
gn	=	green
bl	=	blue
gr	=	grey
li	=	lilac
ge	=	yellow
or	=	orange
rs	=	pink

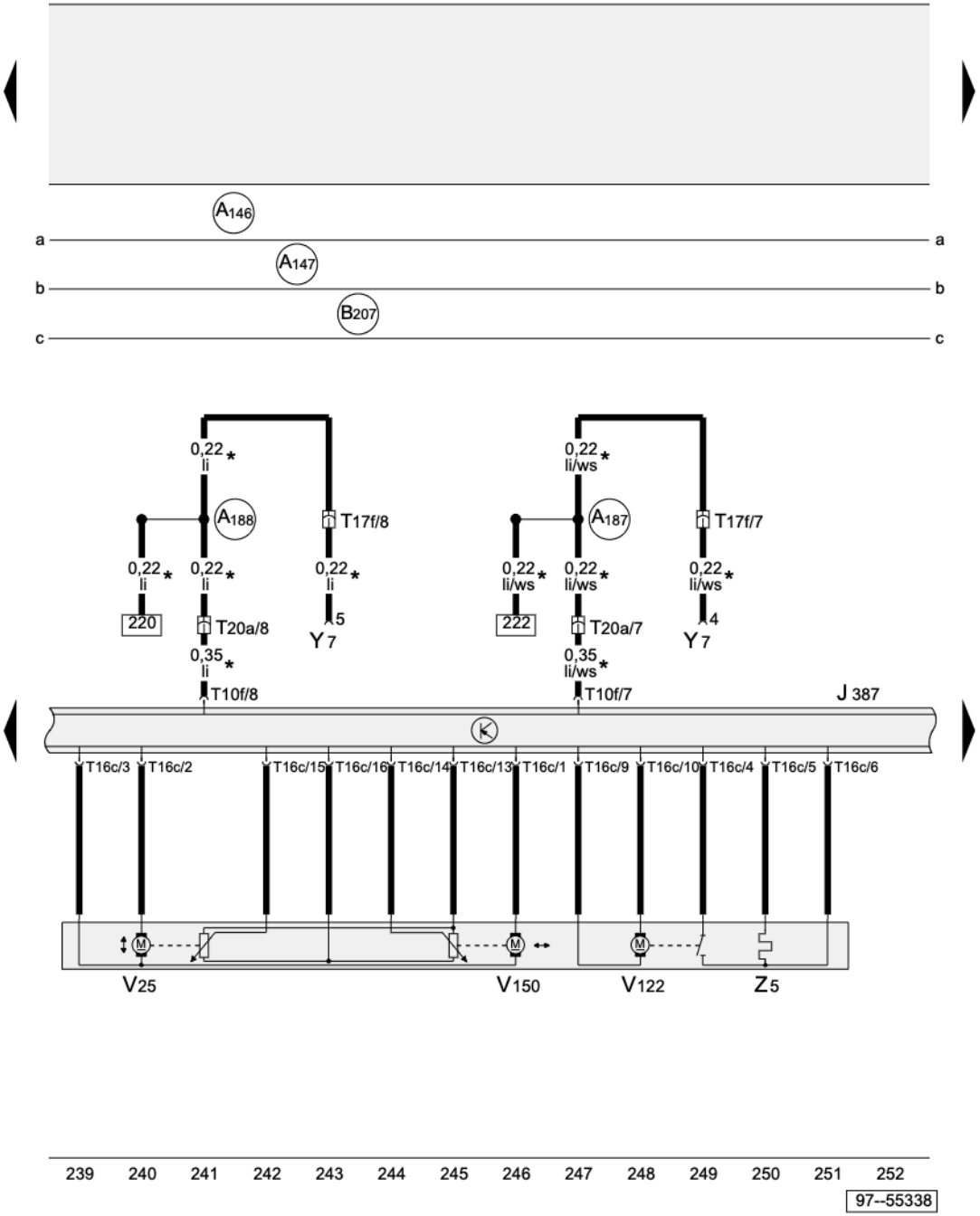

Door control module, passanger side with window regulator, Mirror Adjustment with fold-away function, Automatic Day/ Night Interior Mirror

J387	Door control module, passenger side
T10f	10-Pin Connector, black, on door control module, passenger door
T16c	16-Pin Connector, on door control module, passenger door
T17f	17-Pin Connector, orange, connector station A-pillar, left
T20a	20-Pin Connector, black, door A-pillar, right
V25	Passenger's Side Mirror Adjustment Motor
V122	Motor for fold-in mirror, passenger side
V150	Motor for mirror adjustment, passenger side
Y7	Automatic Day/Night Interior Mirror
Z5	Heated outside mirror, passenger side
A146	Comfort System High-bus Connection (in instrument panel wiring harness)
A147	Comfort System Low-bus Connection (in instrument panel wiring harness)
A187	Automatic Day/Night Interior Mirror Connection 1 (in instrument panel wiring harness)
A188	Automatic Day/Night Interior Mirror Connection 1 (in instrument panel wiring harness)
B207	Connection (comfort), in passenger compartment wiring harness

* with Automatic Day/Night Interior Mirror only

Protected by copyright. Copying for private or commercial purposes, in part or in whole, is not permitted unless authorised by AUDI AG. AUDI AG does not guarantee or accept any liability with respect to the correctness of information in this document. Copyright by AUDI AG.

ws	=	white
sw	=	black
ro	=	red
br	=	brown
gn	=	green
bl	=	blue
gr	=	grey
li	=	lilac
ge	=	yellow
or	=	orange
rs	=	pink

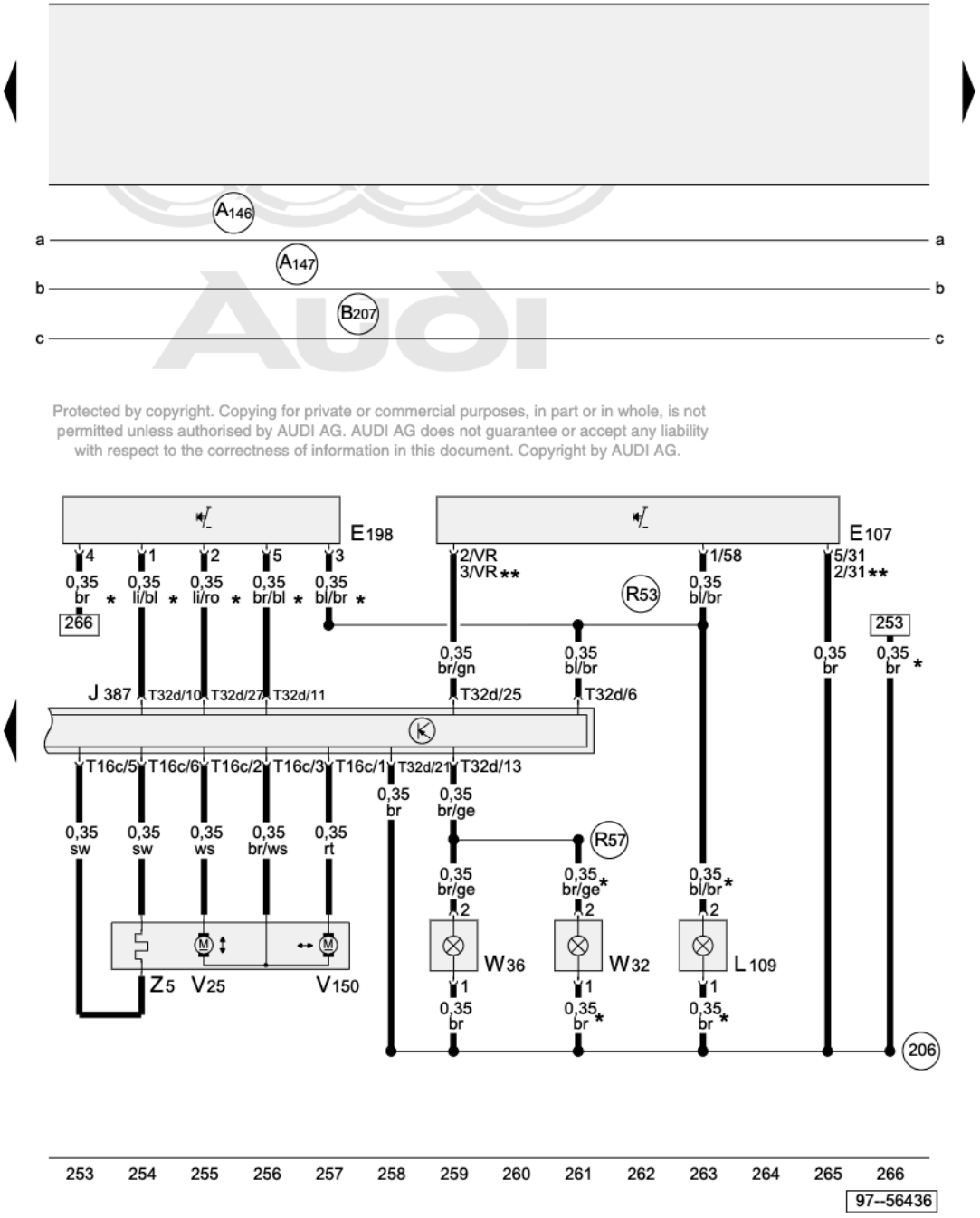

Protected by copyright. Copying for private or commercial purposes, in part or in whole, is not permitted unless authorised by AUDI AG. AUDI AG does not guarantee or accept any liability with respect to the correctness of information in this document. Copyright by AUDI AG.

Door control module, passanger side with window regulator, mirror adjustment, Door opener lighting, Entry light, Door warning light

E107	Switch for window regulator, in passenger door
E198	Passenger Side Interior Lock Switch
J387	Door control module, passenger side
L109	Door opener lighting, passenger side
T16c	16-Pin Connector, on door control module, passenger door
T32d	32-Pin Connector, grey, door control module, passenger's door
V25	Passenger's Side Mirror Adjustment Motor
V150	Motor for mirror adjustment, passenger side
W32	Entry light front, right
W36	Door warning light, passenger side
Z5	Heated outside mirror, passenger side
206	Ground connection, in passenger's door wiring harness
A146	Comfort System High-bus Connection (in instrument panel wiring harness)
A147	Comfort System Low-bus Connection (in instrument panel wiring harness)
B207	Connection (comfort), in passenger compartment wiring harness
R53	Connection (58s) (in right front door wiring harness)
R57	Courtesy Light Connection (in right front door wiring harness)
*	if it exixts
**	from 2003 m. y. (phased in modification)

ws	=	white
sw	=	black
ro	=	red
br	=	brown
gn	=	green
bl	=	blue
gr	=	grey
li	=	lilac
ge	=	yellow
or	=	orange
rs	=	pink

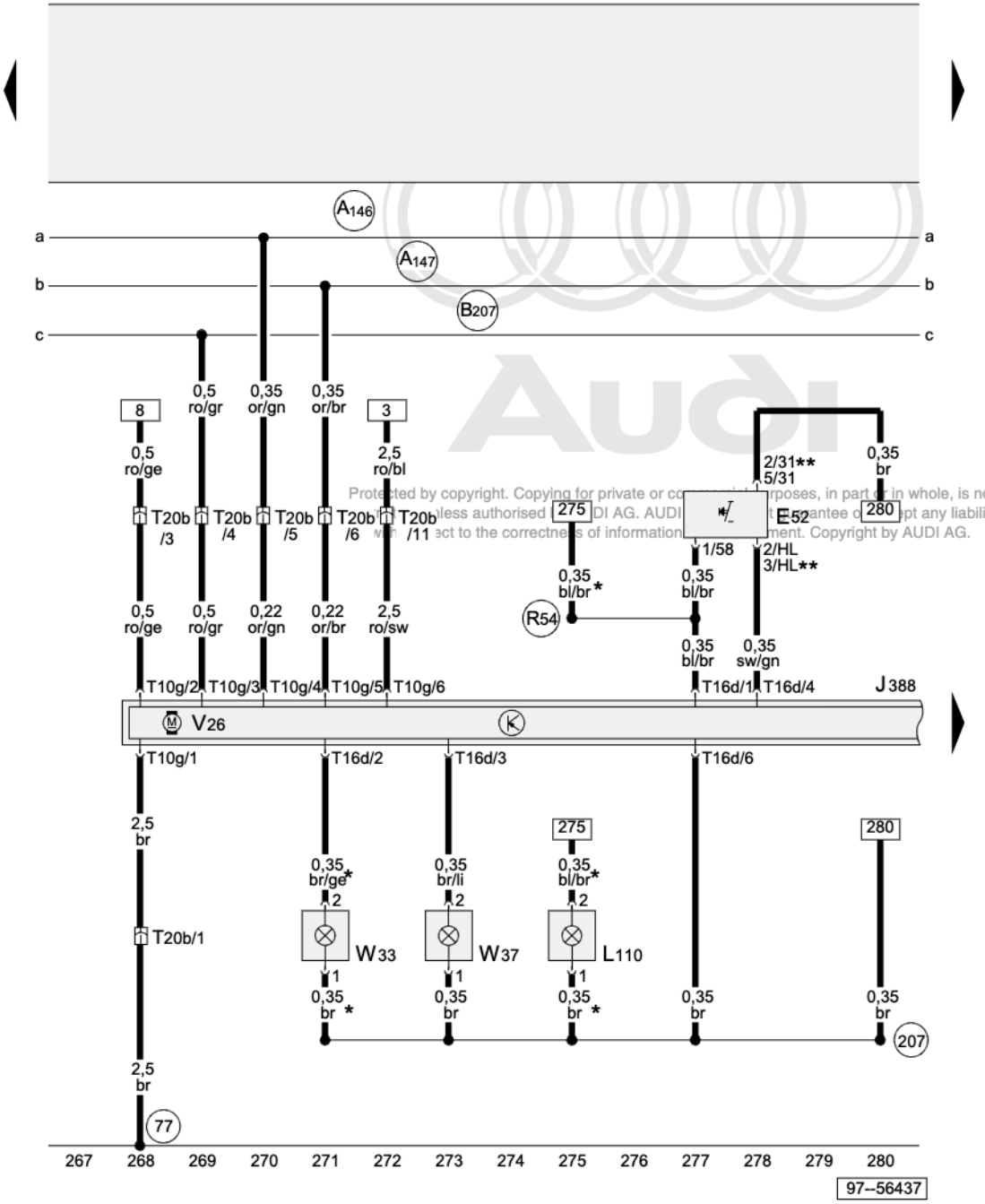

Protected by copyright. Copying for private or commercial purposes, in part or in whole, is not permitted unless authorised by AUDI AG. AUDI AG does not guarantee or accept any liability with respect to the correctness of information in this document. Copyright by AUDI AG.

Door control module, rear, left, window regulator, Door opener lighting, Entry light, Door warning light

E52	Left Rear Window Switch, (In LR Door)
J388	Door control module, rear, left
L110	Door opener lighting, left rear
T10g	10-Pin Connector, black, on door control module, rear, left
T16d	16-Pin Connector, brown, door control module, rear, left
T20b	20-Pin Connector, black, door B-pillar, left
V26	Motor for window regulator, rear, left
W33	Entry light rear, left
W37	Door warning light rear, left
77	Ground connection (lower left B-pillar)
207	Ground connection, in left rear door wiring harness
A146	Comfort System High-bus Connection (in instrument panel wiring harness)
A147	Comfort System Low-bus Connection (in instrument panel wiring harness)
B207	Connection (comfort), in passenger compartment wiring harness
R54	Connection (58s) (in left rear door wiring harness)
*	if it exixts
**	from 2003 m. y. (phased in modification)

ws	=	white
sw	=	black
ro	=	red
br	=	brown
gn	=	green
bl	=	blue
gr	=	grey
li	=	lilac
ge	=	yellow
or	=	orange
rs	=	pink

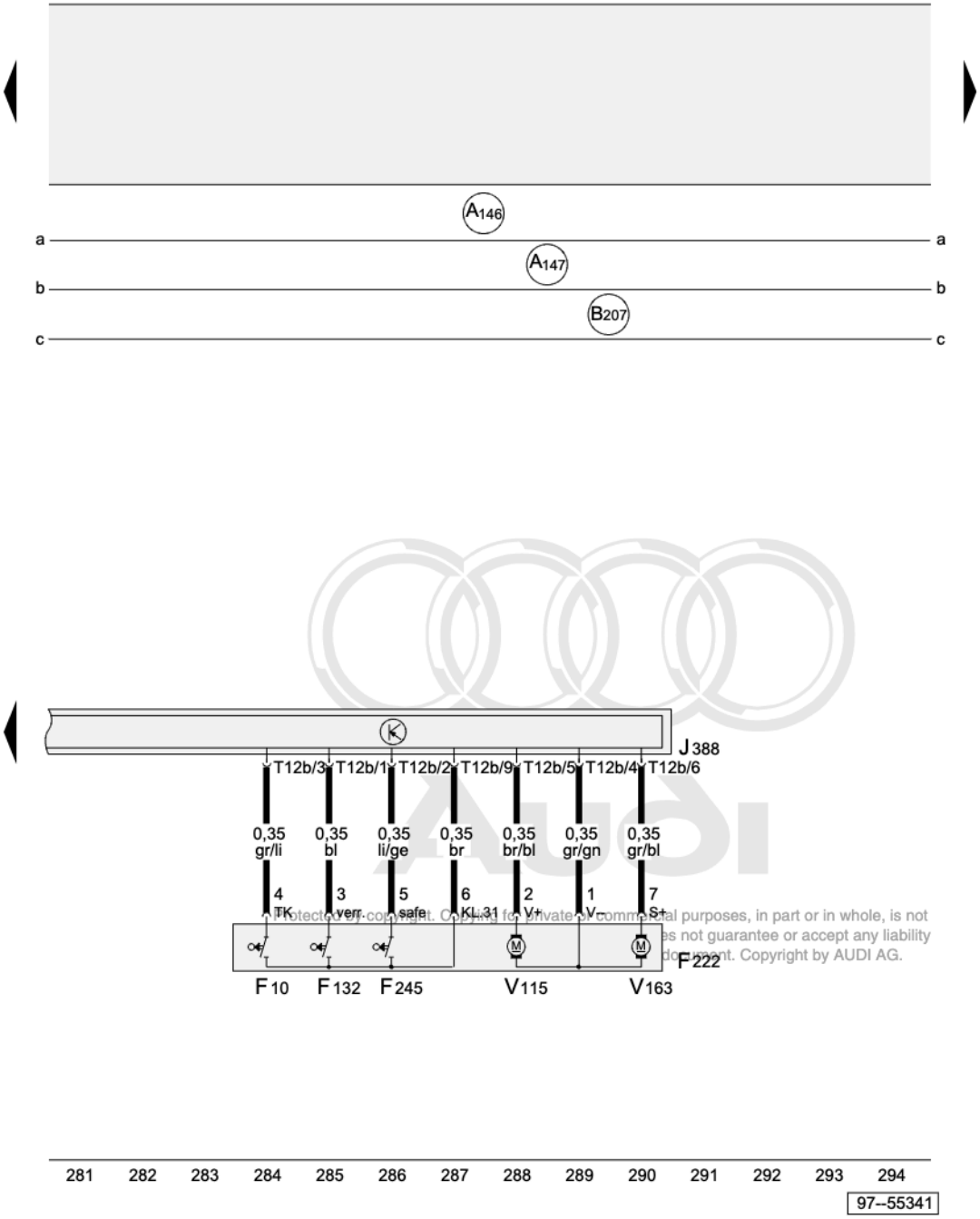

Protected by copyright. Copying for private or commercial purposes, in part or in whole, is not permitted unless AUDI AG does not guarantee or accept any liability with respect to the correctness of information in this document. Copyright by AUDI AG.

Door control module, rear, left, Lock unit for central locking, rear, left

F10	Left Rear Door Contact Switch
F132	Left Rear Central Locking System Activator/Switch
F222	Lock unit for central locking, rear, left
F245	Adjusting element for central locking (safe), left rear door
J388	Door control module, rear, left
T12b	12-Pin Connector, black, on door control module, rear, left
V115	Left Rear Central Locking System Motor
V163	Left Rear Central Locking (Safe) Motor
A146	Comfort System High-bus Connection (in instrument panel wiring harness)
A147	Comfort System Low-bus Connection (in instrument panel wiring harness)
B207	Connection (comfort), in passenger compartment wiring harness

ws	=	white
sw	=	black
ro	=	red
br	=	brown
gn	=	green
bl	=	blue
gr	=	grey
li	=	lilac
ge	=	yellow
or	=	orange
rs	=	pink

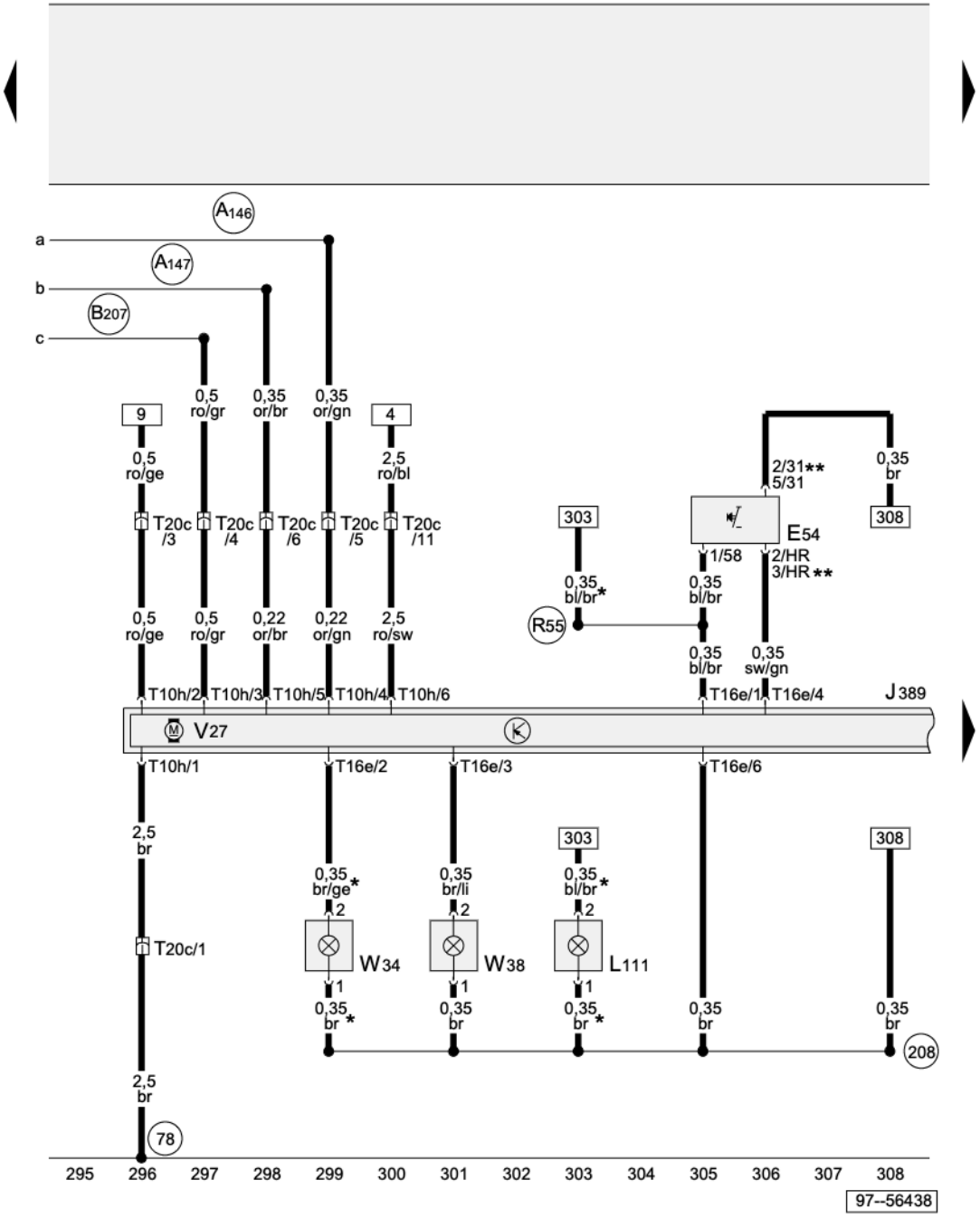

Door control module, rear, right, window regulator, Door opener lighting, Entry light, Door warning light

E54	Right Rear Window Switch, (In RR Door)
J389	Door control module, rear, right
L111	Door opener lighting, right rear
T10h	10-Pin Connector, black, on door control module, rear, right
T16e	16-Pin Connector, brown, door control module, rear, right
T20c	20-Pin Connector, black, door B-pillar, right
V27	Motor for window regulator, rear, right
W34	Entry light rear, right
W38	Door warning light rear, right
78	Ground connection (lower right B-pillar)
208	Ground connection, in right rear door wiring harness
A146	Comfort System High-bus Connection (in instrument panel wiring harness)
A147	Comfort System Low-bus Connection (in instrument panel wiring harness)
B207	Connection (comfort), in passenger compartment wiring harness
R55	Connection (58s) (in right rear door wiring harness)
*	if it exixts
**	from 2003 m. y. (phased in modification)

Protected by copyright. Copying for private or commercial purposes, in part or in whole, is not permitted unless authorised by AUDI AG. AUDI AG does not guarantee or accept any liability with respect to the correctness of information in this document. Copyright by AUDI AG.

ws	=	white
sw	=	black
ro	=	red
br	=	brown
gn	=	green
bl	=	blue
gr	=	grey
li	=	lilac
ge	=	yellow
or	=	orange
rs	=	pink

Door control module, rear, right, Lock unit for central locking, rear, right

F11	Right Rear Door Contact Switch
F134	Right Rear Central Locking System Activator/Switch
F223	Lock unit for central locking, rear, right
F246	Adjusting element for central locking (safe), right rear door
J389	Door control module, rear, right
T12c	12-Pin Connector, black, on door control module, rear, right
V97	Double Cab Right Rear Door Central Locking System Motor
V164	Right Rear Central Locking (Safe) Motor

Protected by copyright. Copying for private or commercial purposes, in part or in whole, is not permitted unless authorised by AUDI AG. AUDI AG does not guarantee or accept any liability with respect to the correctness of information in this document. Copyright by AUDI AG.

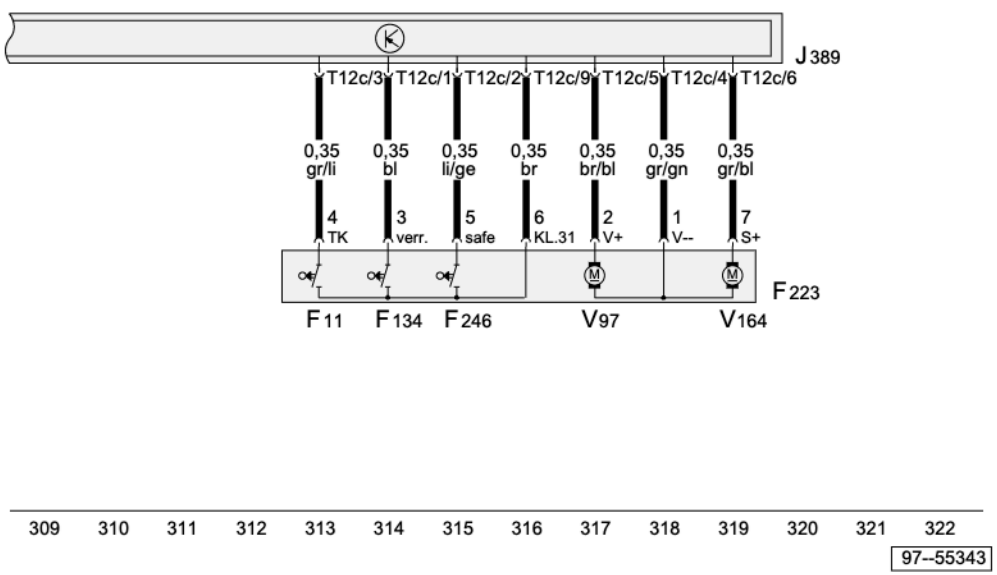

ws	=	white
sw	=	black
ro	=	red
br	=	brown
gn	=	green
bl	=	blue
gr	=	grey
li	=	lilac
ge	=	yellow
or	=	orange
rs	=	pink